GENTEC®

www.gentec.com



ULTRA-HIGH PURITY

Regulators • Valves • Flow Switches • Vacuum Generators • Gas Sticks • Pressure Gauges • Fittings

Solutions for Life

QMS REGISTERED 0541

API Spec Q1 Registered



About Us

GENTEC is a global leader in the design, engineering, and manufacturing of critical gas delivery systems and components for the semiconductor industry. Products include ultra-high purity gas regulators, pressure gauges, valves, fittings and substrates. With over 50 years of manufacturing experience, **GENTEC** remains committed to delivering top-notch quality, ensuring the seamless realization of next generational systems.



Our Team

Our highly educated team of engineers, salespeople, technicians, managers, and customer service personnel are dedicated to providing you with products with the highest quality, reliability and performance. We hold the highest standards to our manufacturing processes; our total process management maximizes our production efficiency while ensuring product quality.

We work closely with all of our customers to design products specific to your needs. This includes developing new products, redesigning existing products, and customizing configuration / packaging. It is our priority to foster a strong relationship with each and every customer.

Quality Assurance

All of our products are manufactured under stringent quality control. We are ISO 9001: 2001 and API certified.
Our products meet UL, CE, SEMI, and various international standards and certifications.

Manufacturing Capabilities

Products are manufactured in a 50,000 square meter facility boasting state-of-the-art CNC centers and fully automated robotic arms. To ensure cleanliness, we utilize an 18.25 MΩ deionized ultra-pure water system and a 29-tank automatic ultrasonic cleaning system. Additionally, a 99.99999% ultra-pure nitrogen plant and orbital welding are used in the manufacturing and assembly process. Our electropolishing and surface treatment facility can achieve Zero Emission and significantly minimize our environmental footprint, showcasing our commitment to a sustainable environment.

Cleanroom Facilities

Our Class 100 (ISO 5) cleanrooms are designed for ultra-high purity (UHP) product manufacturing. UHP products undergo precision machining, wetted surface treatment, electro-polishing, and passivation. All UHP products are cleaned using 18 MΩ deionized (DI) water in a cascade ultrasonic tank. To ensure optimal UHP product quality, they are subsequently vacuum-dried and double-bagged.

TABLE OF CONTENTS



UHP REGULATORS

04-05. U10 UHP Regulators
06-07. U11 UHP Regulators
08-09. U12 UHP Regulators
10-11. U13 UHP Regulators
12-13. U19 UHP Regulators
14-15. U210 UHP Regulators
16-17. U211 UHP Regulators
18-19. U21 UHP Regulators
20-21. U22 UHP Regulators
22-23. U23 UHP Regulators
24-25. U31 UHP Regulators
26-27. U41 UHP Regulators
28-29. U61 UHP Regulators
30-31. U71 UHP Regulators
32-33. U72 UHP Regulators
34-35. U73 UHP Regulators
36-37. U74 UHP Regulators



UHP VALVES

40-41. DV56 Diaphragm Valves
42-43. DV74 Diaphragm Valves
44-45. DV81 Diaphragm Valves
46-47. DV85 Diaphragm Valves
48-49. DV86 Diaphragm Valves
50-51. MDV86 Diaphragm Valves
52-53. DV87 Diaphragm Valves
54-55. DV88 Diaphragm Valves
56-57. DV89 Diaphragm Valves
58-59. DV90 Diaphragm Valves
60-61. ALD16 Diaphragm Valves
62-63. ALD26 Diaphragm Valves
64-65. ALD27 Diaphragm Valves
66-67. ALD37 Diaphragm Valves
68-69. BDV1 Bleed Valves
70-71. V400 Cylinder Valves
72-73. V800 Cylinder Valves
74-75. CV52 Check Valves
76-77. CV53 Check Valves
78-79. MV3 Bellows Metering Valves
80-81. MV4 Bellows Metering Valves



UHP FLOW SWITCHES

82-83. UFS Series Flow Switches
84-85. UFS20, UFS30 Series Flow Switches



UHP GAS STICKS

88-89. PU Series Gas Sticks



UHP VACUUM GENERATORS

86. VG22 Series Vacuum Generators
87. VG23 Series Vacuum Generators



UHP PRESSURE GAUGES

90-93. GU, GUR Series Pressure Gauge
92-94. GURA Series Pressure Gauge



UHP FITTINGS

95-106. Face Seal Fittings
107-114. Weld Fittings

UHP REGULATORS

U Series



100% Helium Leak Test



Pressure Gauge

- 316L stainless steel case provides durability
- German imported Bourdon tubes provide high accuracy and stability

Connection Point

- The pressure gauge, body and inlet / outlet connections are orbital welded, ensuring a leak-proof, robust seal that guarantees long-lasting performance.

Inlet / Outlet Connection

- Fabricated from high-strength, corrosion-resistant 316L/316L VAR stainless steel bar stock
- Manufactured using advanced CNC machines to ensure the highest quality parts
- Wetted areas are electropolished, with a surface finish of 10µin available as an option
- 316L and Hastelloy diaphragms create a metal-to-metal, leak-proof seal
- Multiple port configurations and inlet / outlet connections available

Old Code	New Code	Inlet / Outlet Connection
None	VM4	1/4″ male FSR
None	VM8	1/2″ male FSR
92	VSM4	1/4″ swivel male FSR
91	VSF4	1/4″ swivel female FSR
96	VSM8	1/2″ swivel male FSR
95	VSF8	1/2″ swivel female FSR
41	TW4	1/4″ weld stub
42	TW6	3/8″ weld stub
43	TW8	1/2″ weld stub
None	TW12	3/4″ weld stub

Body

- Fabricated from high-strength corrosion-resistant 316L/316L VAR stainless steel bar stock
- Fabricated with advanced CNC machines to produce the highest quality of parts
- Wetted area are electropolished, Surface Finish of 10 µin is optional
- 316L & Hastelloy diaphragms produce a metal to metal, leak-proof seal
- Multiple Port Configurations and inlet/outlet connections to satisfy all requirements

Process Specificaion

Cleaning	Assembly and Packaging	Process Code	Process Standard
Ultra-high purity cleaning with continuously monitored deionized water ultrasonic cleaning system	Assembled and packaged in a Class 100 (ISO 5) cleanroom, then double vacuum sealed to ensure optimal cleanliness and protection	S1	Ultra-high Purity (UHP) Process Standard
Ultra-high purity cleaning with continuously monitored deionized water ultrasonic cleaning system	Assembled and individually packaged in a controlled clean environment	S2	Photovoltaic Process Standard

Regulator Port Configurations

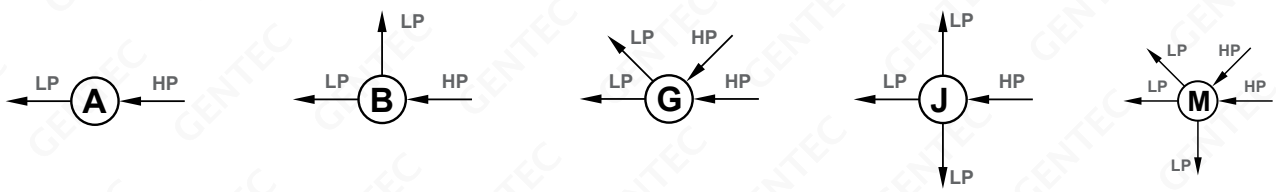

U10 SERIES

Ultra-high Purity Regulators

Solutions for Life

U10 series regulators are manufactured to comply with SEMI standards. The products are assembled and tested in a Class 100 (ISO 5) cleanroom and suitable for semiconductor and ultra-high purity applications.



U10SLAK-ILW-VSF4-S1

Features

- 316L or 316L VAR stainless steel body
- Metal to metal diaphragm to body seal
- Rear bracket mounting
- Fully internal electropolished
- Cleaned, assembled and packaged for ultra-high purity semiconductor applications
- High-cycle life
- 100% Helium-leak tested

Materials

- Body: 316L, 316L VAR
- Seat: PCTFE*, Vespel® (Optional)
- Diaphragm: C-22

*: Standard Material

Specifications

- Max. Inlet Pressure: 100, 150, 500, 3000 psi
- Max. Outlet Pressure: 25, 50, 100, 150 psi
- Supply Pressure Effect:
  SPE = 0.25 psi / 20 psi (U10), SPE = 0.4 psi / 20 psi (U10A)
- Temperature: -40°F ~ 165°F (-40°C ~ 74°C)
- Flow Capacity:
  U10 Series Cv=0.06, U10A Series Cv=0.1
- Maximum Leak Rate:
  Inboard Leakage: 1 x 10^{-9} atm cc/sec He
  Across Seat Leakage: 4 x 10^{-8} atm cc/sec He
- Proof Pressure: 150% of maximum rated pressure
- Burst Pressure: 400% of maximum rated pressure
- Wetted Surface: Ra 10 µin
- Internal Volume: 2.4 cc

Material Configuration	Noncorrosive		Corrosive
	U10*SL	U10*SLV	U10*SLV***-H
Body	316L	316L VAR	316L VAR
Diaphragm	C-22	C-22	C-22
Stem	316L	316L	C-22
Nozzle	316L	316L	C-22
Seat	PCTFE, Vespel® (Optional)	PCTFE, Vespel® (Optional)	PCTFE, Vespel® (Optional)
Wetted Surface	10 µin	10 µin	10 µin

Dimensions

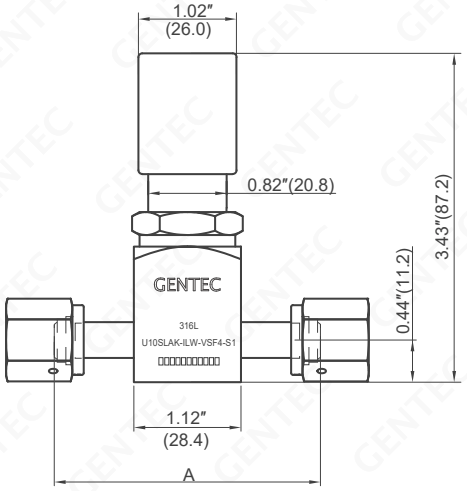

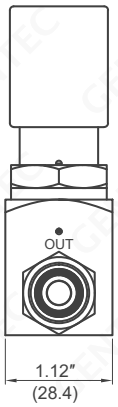

Connection Type		Dimensions
		A
VSF4	1/4″ swivel female FSR	2.78″ (70.6)
VSM4	1/4″ swivel male FSR	2.94″ (74.8)

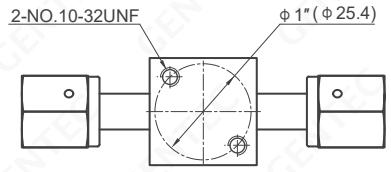

Rear Bracket Mounting

Dimension: in.(mm)

Flow Data

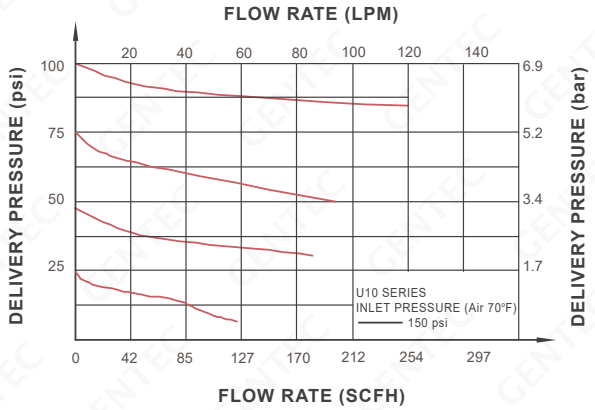

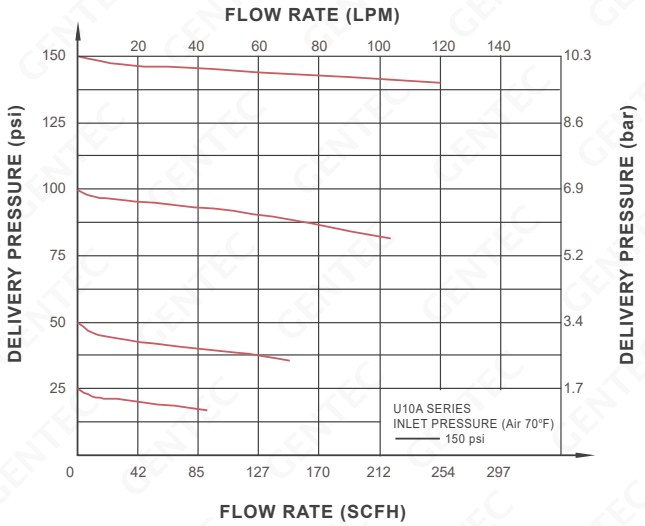

Ordering Information

EX: U10	SL	A	K	- I	L	W	- VSF4 - VSM4	- H	- S1
Series	Body Material	Body Ports	Seat Material	Inlet Pressure	Outlet Pressure	Gauge*	Inlet / Outlet Connection	Corrosion Resistance	Process Standard
U10 U10A	SL: 316L SLV: 316L VAR	A B	K: PCTFE V: Vespel®	D: 3000 psi F: 500 psi H: 150 psi I: 100 psi	H: 0~150 psi I: 0~100 psi K: 0~50 psi L: 0~25 psi	W: Without Gauge	VSF4, VSM4 TW4 ..... When Inlet and Outlet Connections are the same, please write a connection code.	None: Standard H: C-22 stem and nozzle See Material Configuration table.	S1: UHP Process Standard S2: Photovoltaic Process Standard

*: Gauges' connection: 1/4″swivel male FSR , other connection type please conect GENTEC.

U11 SERIES

Ultra-high Purity Regulators

Solutions for Life

U11 series single stage Tied-diaphragm ultra-high purity regulator is developed for the semiconductor industry, it is manufactured in accordance with SEMI requirement and assembled, tested and packaged in a Class 100 (ISO 5) cleanroom.



U11SLBK-DHP-VSM4-S1



U11SLAK-DHW-VSF4-S1

Features

- 316L or 316L VAR stainless steel body
- Metal to metal diaphragm to body seal
- Easy front panel and rear bracket mounting
- Gauge ports are standard with 1/4″ face seal male
- Fully internal electropolished
- Cleaned, assembled and packaged for ultra-high purity semiconductor applications
- High-cycle life
- 100% Helium-leak tested

Materials

- Body: 316L, 316L VAR
- Seat: PCTFE*, Vespel® (Optional)
- Diaphragm: C-22

*: Standard Material

Specifications

- Max. Inlet Pressure: 500, 3000, 4500 psi
- Max. Outlet Pressure: 25, 50, 100, 150, 250, 500 psi
- Supply Pressure Effect:
  SPE = 0.35 psi / 100 psi (U11), SPE = 0.65 psi / 100 psi (U11A)
- Temperature: -40°F ~ 165°F (-40°C ~ 74°C)
- Flow Capacity:
  U11 Series Cv=0.09, U11A Series Cv=0.15
- Maximum Leak Rate:
  Inboard Leakage: 1 x 10^{-9} atm cc/sec He
  Across Seat Leakage: 4 x 10^{-8} atm cc/sec He
- Proof Pressure: 150% of maximum rated pressure
- Burst Pressure: 400% of maximum rated pressure
- Wetted Surface: Ra 10 µin
- Internal Volume: 8.4 cc

Material Configuration	Noncorrosive		Corrosive
	U11*SL	U11*SLV	U11*SLV***-H
Body	316L	316L VAR	316L VAR
Diaphragm	C-22	C-22	C-22
Stem	316L	316L	C-22
Nozzle	316L	316L	C-22
Seat	PCTFE, Vespel® (Optional)	PCTFE, Vespel® (Optional)	PCTFE, Vespel® (Optional)
Wetted Surface	10 µin	10 µin	10 µin

Dimensions

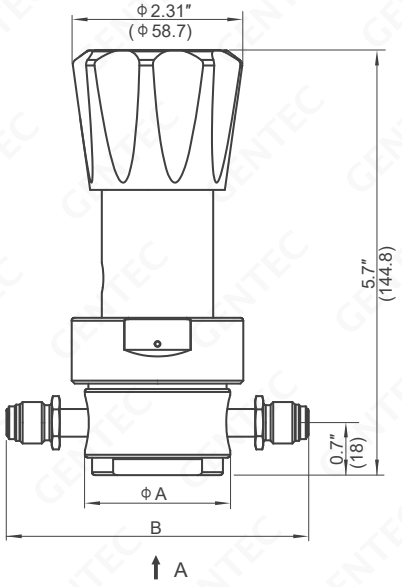

Connection Type		Dimensions A	Dimensions B
VSF4	1/4″ swivel female FSR	2″ (50.8)	3.7″ (94)
VSM4	1/4″ swivel male FSR		3.7″ (94)
VSF8	1/2″ swivel female FSR		4.7″ (119.4)
VSM8	1/2″ swivel male FSR		4.7″ (119.4)
TW4	1/4″ weld stub		2.96″ (75.2)
TW6	3/8″ weld stub		2.96″ (75.2)



A

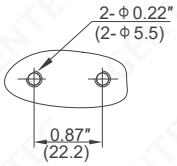

Rear Bracket Mounting

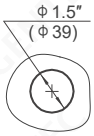

Front Panel Mounting
Maximum thickness
is 0.28″(7.1mm)

Dimension: in.(mm)

Flow Data

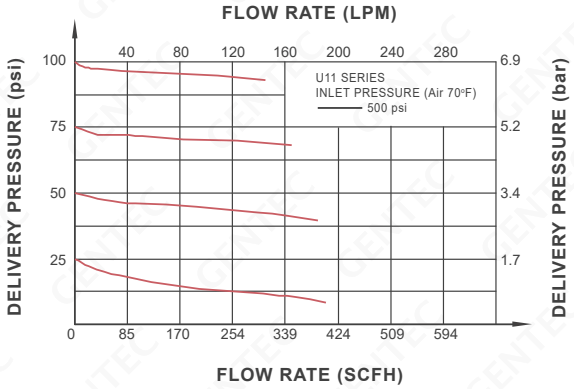

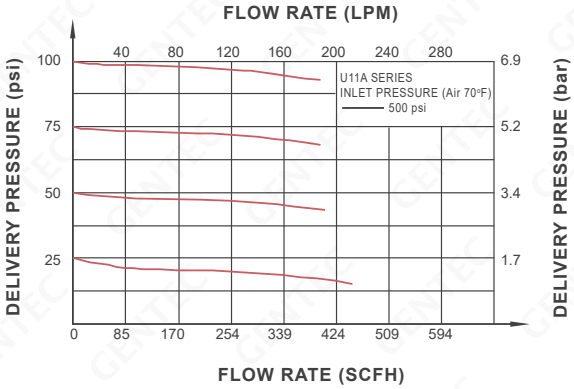

Ordering Information

EX: U11	SL	A	K	- D	H	P	- VSF4 - VSM4	- H	- P	- S1
Series	Body Material	Body Ports	Seat Material	Inlet Pressure	Outlet Pressure	Gauge*	Inlet / Outlet Connection	Corrosion Resistance	Options	Process Standard
U11 U11A	SL: 316L SLV: 316L VAR	A B G	K: PCTFE V: Vespel®	C: 4500 psi D: 3000 psi F: 500 psi	F: 0~500 psi G: 0~250 psi H: 0~150 psi I: 0~100 psi K: 0~50 psi L: 0~25 psi	W: Without Gauge P: psi / bar Gauge K: psi / kPa Gauge	VSF4, VSM4, VSF8, VSM8, TW4, TW6 ..... When Inlet and Outlet Connections are the same, please write a connection code.	None: Standard H: C-22 stem and nozzle See Material Configuration table.	None: Rear Bracket Mounting P: Panel Mounting	S1: UHP Process Standard S2: Photovoltaic Process Standard

*: Gauges' connection: 1/4″swivel male FSR , other connection type please conect GENTEC.

U12 SERIES

Ultra-high Purity Regulators

Solutions for Life

U12 series single stage Tied-diaphragm ultra-high purity regulator is developed for the semiconductor industry, it is manufactured in accordance with SEMI requirement and assembled, tested and packaged in a Class 100 (ISO 5) cleanroom.



U12SLBK-DHP-VSM4-S1



U12SLAK-DHW-VSF4-S1

Features

- 316L or 316L VAR stainless steel body
- Metal to metal diaphragm to body seal
- Easy front panel and rear bracket mounting
- Gauge ports are standard with 1/4″ face seal male
- Fully internal electropolished
- Cleaned, assembled and packaged for ultra-high purity semiconductor applications
- High-cycle life
- 100% Helium-leak tested

Materials

- Body: 316L, 316L VAR
- Seat: PCTFE*, Vespel® (Optional)
- Diaphragm: C-22

*: Standard Material

Specifications

- Max. Inlet Pressure: 250, 500, 2200, 3000 psi
- U12 Series Max. Outlet Pressure: 25, 50, 100, 150, 250 psi
- U12V Series Max. Outlet Pressure:
  30″ Hg Vac~30 psi, 30″ Hg Vac~60 psi, 30″ Hg Vac~100 psi
- Supply Pressure Effect: SPE = 1.6 psi / 100 psi
- Temperature: -40°F ~ 165°F (-40°C ~ 74°C)
- Flow Capacity: Cv=0.45
- Maximum Leak Rate:
  Inboard Leakage: 1 x 10^{-9} atm cc/sec He
  Across Seat Leakage: 4 x 10^{-8} atm cc/sec He
- Proof Pressure: 150% of maximum rated pressure
- Burst Pressure: 400% of maximum rated pressure
- Wetted Surface: Ra 10 µin
- Internal Volume: 17.4 cc

Material Configuration	Noncorrosive		Corrosive
	U12*SL	U12*SLV	U12*SLV***-H
Body	316L	316L VAR	316L VAR
Diaphragm	C-22	C-22	C-22
Stem	316L	316L	C-22
Nozzle	316L	316L	C-22
Seat	PCTFE, Vespel® (Optional)	PCTFE, Vespel® (Optional)	PCTFE, Vespel® (Optional)
Wetted Surface	10 µin	10 µin	10 µin

Dimensions

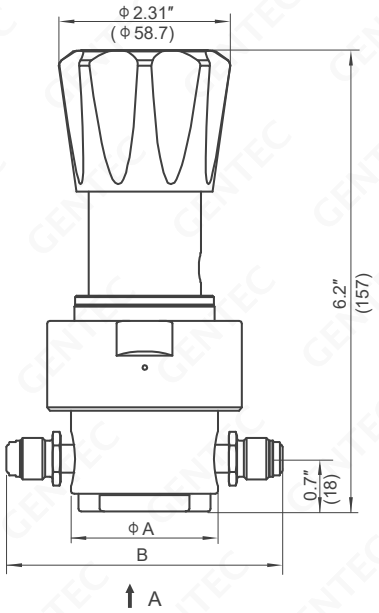

Dimension: in.(mm)

Connection Type		Dimensions A	Dimensions B
VSF4	1/4″ swivel female FSR	2″ (50.8)	3.7″ (94)
VSM4	1/4″ swivel male FSR		4″ (101.6)
VSF8	1/2″ swivel female FSR	2.5″ (63.5)	5.22″ (132.6)
VSM8	1/2″ swivel male FSR		5.22″ (132.6)
TW6	3/8″ weld stub		4″ (101.6)
TW8	1/2″ weld stub		4.34″ (110.2)



A

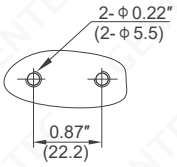

Rear Bracket Mounting

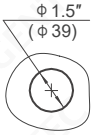

Front Panel Mounting
Maximum thickness
is 0.28″(7.1mm)

Flow Data

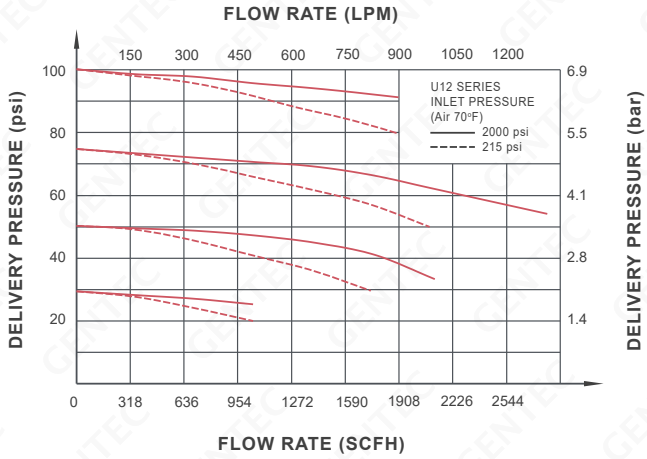

Ordering Information

EX: U12	SL	A	K	- D	H	P	-VSF4-VSM4	- H	- P	- S1
Series	Body Material	Body Ports	Seat Material	Inlet Pressure	Outlet Pressure	Gauge*	Inlet / Outlet Connection	Corrosion Resistance	Options	Process Standard
U12	SL: 316L SLV: 316L VAR	A B G	K: PCTFE V: Vespel®	D: 3000 psi X: 2200 psi	G: 0~250 psi H: 0 ~ 150 psi I: 0 ~ 100 psi	W: Without Gauge P: psi / bar Gauge K: psi / kPa Gauge	VSF4, VSM4, VSF8, VSM8, TW6, TW8	None: Standard H: C-22 stem and nozzle	None: Rear Bracket Mounting P: Panel Mounting	S1: Ultra-high purity Process Standard S2: Photovoltaic Process Standard
				F: 500 psi	G: 0~250 psi H: 0 ~ 150 psi I: 0 ~ 100 psi K: 0 ~ 50 psi L: 0 ~ 25 psi		When Inlet and Outlet Connections are the same, please write a connection code.	See Material Configuration table.		
U12V				G: 250 psi	Q: 30″Hg Vac~30 psi R: 30″Hg Vac~60 psi S: 30″Hg Vac~100 psi					

*: Gauges' connection: 1/4″swivel male FSR , other connection type please conect GENTEC.

U13 SERIES

Ultra-high Purity Regulators

Solutions for Life

U13 series single stage Tied-diaphragm ultra-high purity regulator is developed for the semiconductor industry, it is manufactured in accordance with SEMI requirement and assembled, tested and packaged in a Class 100 (ISO 5) cleanroom.



U13SLBK-DHP-VSM8-S1



U13SLAK-DHW-VSF8-S1

Features

- 316L or 316L VAR stainless steel body
- Metal to metal diaphragm to body seal
- Easy front panel and rear bracket mounting
- Gauge ports are standard with 1/4″ face seal male
- Fully internal electropolished
- Cleaned, assembled and packaged for ultra-high purity semiconductor applications
- High-cycle life
- 100% Helium-leak tested

Materials

- Body: 316L, 316L VAR
- Seat: PCTFE*, Vespel® (Optional)
- Diaphragm: C-22

*: Standard Material

Specifications

- Max. Inlet Pressure: 500, 3000 psi
- Max. Outlet Pressure: 25, 50, 100, 150, 250 psi
- Supply Pressure Effect:
  SPE = 2.9 psi / 100 psi (U13), SPE = 5 psi / 100 psi (U13A)
- Temperature: -40°F ~ 165°F (-40°C ~ 74°C)
- Flow Capacity:
  U13 Series Cv=0.9, U13A Series Cv=1.1
- Maximum Leak Rate:
  Inboard Leakage: 1 x 10^{-9} atm cc/sec He
  Across Seat Leakage: 4 x 10^{-8} atm cc/sec He
- Proof Pressure: 150% of maximum rated pressure
- Burst Pressure: 400% of maximum rated pressure
- Wetted Surface: Ra 10 µin
- Internal Volume: 17.6 cc

Material Configuration	Noncorrosive		Corrosive
	U13*SL	U13*SLV	U13*SLV***-H
Body	316L	316L VAR	316L VAR
Diaphragm	C-22	C-22	C-22
Stem	316L	316L	C-22
Nozzle	316L	316L	C-22
Seat	PCTFE, Vespel® (Optional)	PCTFE, Vespel® (Optional)	PCTFE, Vespel® (Optional)
Wetted Surface	10 µin	10 µin	10 µin

Dimensions

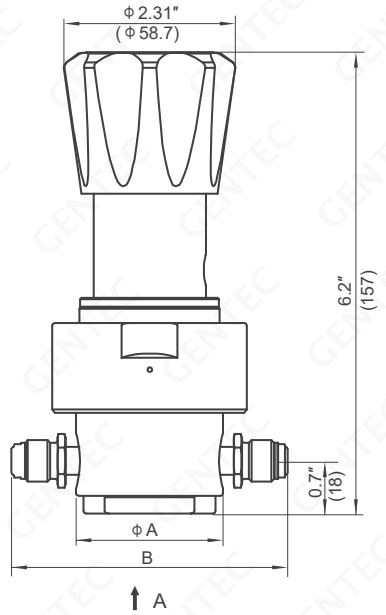

Dimension: in.(mm)

Connection Type		Dimensions A	Dimensions B
VSF4	1/4″ swivel female FSR	2″ (50.8)	3.7″ (94)
VSM4	1/4″ swivel male FSR		4″ (101.6)
VSF8	1/2″ swivel female FSR	2.5″ (63.5)	5.22″ (132.6)
VSM8	1/2″ swivel male FSR		5.22″ (132.6)
VSF12	3/4″ swivel female FSR		6.26″ (159.0)
VSM12	3/4″ swivel male FSR		6.26″ (159.0)
TW6	3/8″ weld stub		4″ (101.6)
TW8	1/2″ weld stub		4.34″ (110.2)



A

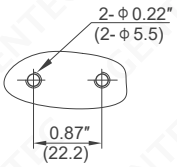

Rear Bracket Mounting

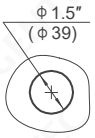

Front Panel Mounting
Maximum thickness
is 0.28″(7.1mm)

Flow Data

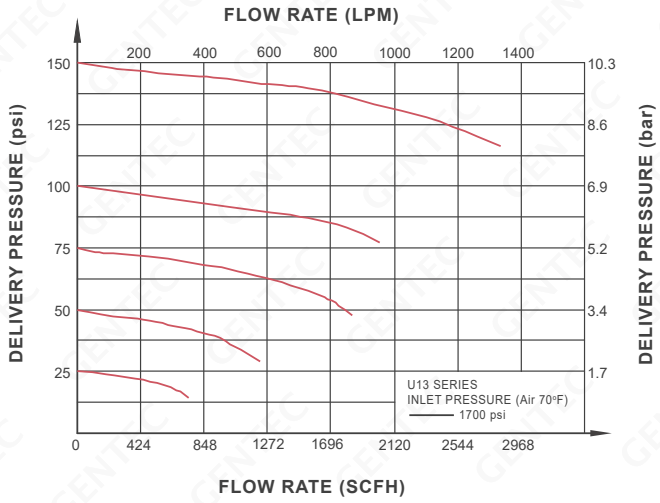

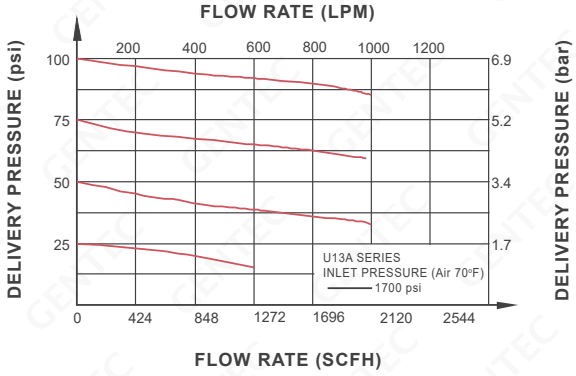

Ordering Information

EX: U13	SL	A	K	- D	H	P	- VSF4 - VSM4	- H	- P	- S1
Series	Body Material	Body Ports	Seat Material	Inlet Pressure	Outlet Pressure	Gauge*	Inlet / Outlet Connection	Corrosion Resistance	Options	Process Standard
U13 U13A	SL: 316L SLV: 316L VAR	A B G	K: PCTFE V: Vespel®	D: 3000 psi	G: 0~250 psi H: 0~150 psi I: 0~100 psi	W: Without Gauge P: psi / bar Gauge K: psi / kPa Gauge	VSF4, VSM4, VSF8, VSM8, TW6, TW8 ..... When Inlet and Outlet Connections are the same, please write a connection code.	None: Standard H: C-22 stem and nozzle See Material Configuration table.	None: Rear Bracket Mounting P: Panel Mounting	S1: UHP Process Standard S2: Photovoltaic Process Standard
				F: 500 psi	G: 0~250 psi H: 0~150 psi I: 0~100 psi K: 0~50 psi L: 0~25 psi					

*: Gauges' connection: 1/4″swivel male FSR , other connection type please conect GENTEC.

U19 SERIES

Ultra-high Purity Regulators

Solutions for Life

U19 series single stage Tied-diaphragm ultra-high purity regulator is developed for the semiconductor industry, it is manufactured in accordance with SEMI requirement and assembled, tested and packaged in a Class 100 (ISO 5) cleanroom.



U19SLBK-DHP-VSM4-S1



U19SLAK-DHW-VSF4-S1

Features

- 316L or 316L VAR stainless steel body
- Metal to metal diaphragm to body seal
- Easy front panel and rear bracket mounting
- Gauge ports are standard with 1/4″ face seal male
- Fully internal electropolished
- Cleaned, assembled and packaged for ultra-high purity semiconductor applications
- High-cycle life
- 100% Helium-leak tested

Materials

- Body: 316L, 316L VAR
- Seat: PCTFE*, Vespel® (Optional)
- Diaphragm: C-22

*: Standard Material

Specifications

- Max. Inlet Pressure: 500, 3000, 4500 psi
- Max. Outlet Pressure: 15, 25, 50, 100, 150, 250 psi
- Supply Pressure Effect:
  SPE = 0.2 psi / 100 psi (U19), SPE = 0.4 psi / 100 psi (U19A)
- Temperature: -40°F ~ 165°F (-40°C ~ 74°C)
- Flow Capacity:
  U19 Series Cv=0.13, U19A Series Cv=0.16
- Maximum Leak Rate:
  Inboard Leakage: 1 x 10^{-9} atm cc/sec He
  Across Seat Leakage: 4 x 10^{-8} atm cc/sec He
- Proof Pressure: 150% of maximum rated pressure
- Burst Pressure: 400% of maximum rated pressure
- Wetted Surface: Ra 10 µin
- Internal Volume: 13.5 cc

Material Configuration	Noncorrosive		Corrosive
	U19*SL	U19*SLV	U19*SLV***-H
Body	316L	316L VAR	316L VAR
Diaphragm	C-22	C-22	C-22
Stem	316L	316L	C-22
Nozzle	316L	316L	C-22
Seat	PCTFE, Vespel® (Optional)	PCTFE, Vespel® (Optional)	PCTFE, Vespel® (Optional)
Wetted Surface	10 µin	10 µin	10 µin

Dimensions

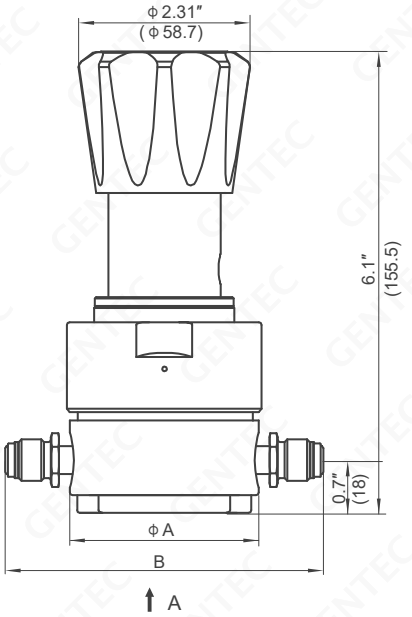

Connection Type		Dimensions A	Dimensions B
VSF4	1/4″ swivel female FSR	2.6″ (65.5)	4.3″ (109)
VSM4	1/4″ swivel male FSR		4.3″ (109)
VSF8	1/2″ swivel female FSR		5.2″ (133)
VSM8	1/2″ swivel male FSR		5.2″ (133)



A

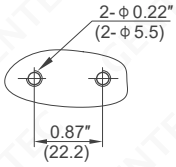

Rear Bracket Mounting



Front Panel Mounting
Maximum thickness
is 0.28″(7.1mm)

Dimension: in.(mm)

Flow Data

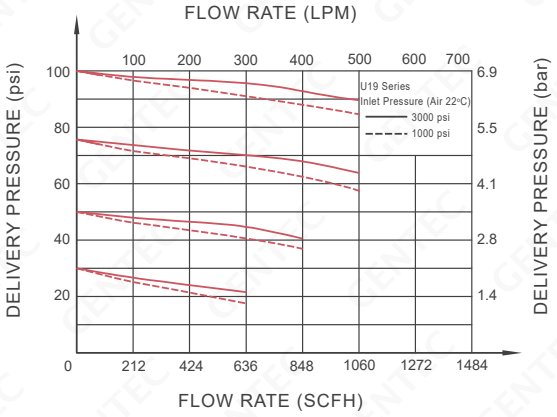

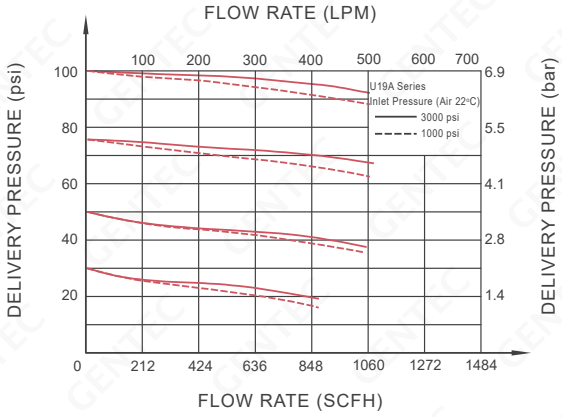

Ordering Information

EX: U19	SL	A	K	- D	H	P	- VSF4 - VSM4	- H	- P	- S1
Series	Body Material	Body Ports	Seat Material	Inlet Pressure	Outlet Pressure	Gauge*	Inlet / Outlet Connection	Corrosion Resistance	Options	Process Standard
U19 U19A	SL: 316L SLV: 316L VAR	A B G	K: PCTFE V: Vespel®	C: 4500 psi D: 3000 psi F: 500 psi	G: 0~250 psi H: 0~150 psi I: 0~100 psi K: 0~50 psi L: 0~25 psi M: 0~15 psi	W: Without Gauge P: psi / bar Gauge K: psi / kPa Gauge	VSF4, VSM4, VSF8, VSM8, ... When Inlet and Outlet Connections are the same, please write a connection code.	None: Standard H: C-22 stem and nozzle See Material Configuration table.	None: Rear Bracket Mounting P: Panel Mounting	S1: UHP Process Standard S2: Photovoltaic Process Standard

*: Gauges' connection: 1/4″swivel male FSR , other connection type please conect GENTEC.

U210 SERIES

Ultra-high Purity Absolute Regulators

Solutions for Life

U210 series single stage ultra high purity absolute regulator is developed for the semiconductor industry, it is manufactured in accordance with SEMI requirement and assembled, tested and packaged in a class 100 clean room.



U210SLBK-GQP-VSM4-S1



U210SLAK-GQW-VSM4-S1

Features

- 316L or 316L VAR stainless steel body
- Metal to metal diaphragm to body seal
- Easy front panel and rear bracket mounting
- Gauge ports are standard with 1/4″ face seal male
- Fully internal electropolished
- Cleaned, assembled and packaged for ultra-high purity semiconductor applications
- High-cycle life
- 100% Helium-leak tested

Materials

- Body: 316L, 316L VAR
- Seat: PCTFE
- Diaphragm: C-22

*: Standard Material

Specifications

- Max. Inlet Pressure: 250 psi
- Max. Outlet Pressure: 30″ Hg Vac~30 psi, 30″ Hg Vac~30 psi, 30″ Hg Vac~60 psi, 30″ Hg Vac~100 psi
- Supply Pressure Effect: SPE = 0.2 psi / 100 psi
- Temperature: -40°F ~ 165°F(-40°C ~ 74°C)
- Flow Capacity: Cv=0.05
- Inboard leakage: $1x10^{-9}$ atm/sec He
- Across seat leakage: $4x10^{-8}$ atm/sec He
- Proof pressure: 150% of maximum rated pressure
- Burst pressure: 400% of maximum rated pressure
- Wetted Surface: Ra 10 µin
- Internal Volume: 8.4 cc

Material Configuration	Noncorrosive		Corrosive
	U210*SL	U210*SLV	U210*SLV***-H
Body	316L	316L VAR	316L VAR
Diaphragm	C-22	C-22	C-22
Stem	316L	316L	C-22
Nozzle	316L	316L	C-22
Seat	PCTFE	PCTFE	PCTFE
Wetted Surface	10 µin	10 µin	10 µin

Dimensions

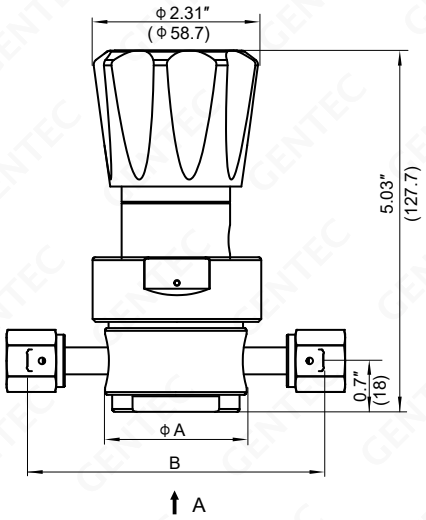

Connection Type		Dimensions A	Dimensions B
VSF4	1/4″ swivel female FSR	1.97″ (50)	3.7″ (94)
VSM4	1/4″ swivel male FSR		3.7″ (94)
VSF8	1/2″ swivel female FSR		4.7″ (119.4)
VSM8	1/2″ swivel male FSR		4.7″ (119.4)
TW4	1/4″ weld stub		2.96″ (75.2)
TW6	3/8″ weld stub		2.96″ (75.2)

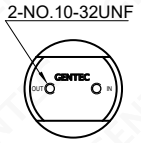

A

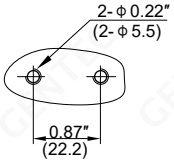

Rear Bracket Mounting

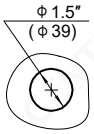

Front Panel Mounting
Maximum thickness
is 0.28″(7.1mm)

Dimension: in.(mm)

Flow Data

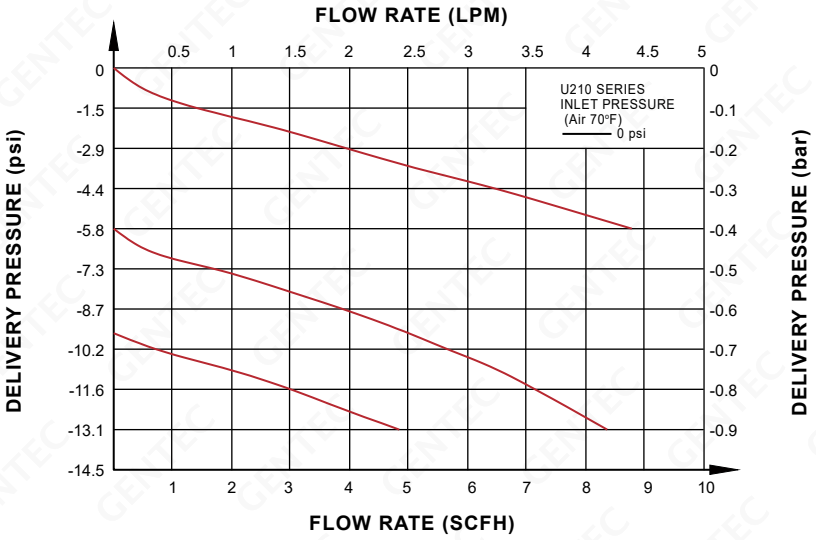

Ordering Information

EX: U210	SL	B	K	- G	Q	P	- VSF4 - VSM4	- H	- P	- S1
Series	Body Material	Body Ports	Seat Material	Inlet Pressure	Outlet Pressure	Gauge*	Inlet / Outlet Connection	Corrosion Resistance	Options	Process Standard
U210	SL: 316L SLV: 316L VAR	A B G	K: PCTFE	G: 250 psi	P: 30″Hg Vac ~ 15 psi Q: 30″Hg Vac ~ 30 psi R: 30″Hg Vac ~ 60 psi S: 30″Hg Vac ~ 100 psi	W: Without Gauge P: psi / bar Gauge K: psi / kPa Gauge	VSF4, VSM4, VSF8, VSM8, TW4, TW6 ..... When Inlet and Outlet Connections are the same, please write a connection code.	None: Standard H: C-22 stem and nozzle See Material Configuration table.	None: Rear Bracket Mounting P: Panel Mounting	S1: UHP Process Standard S2: Photovoltaic Process Standard

*: Gauges' connection: 1/4″swivel male FSR , other connection type please conect GENTEC.

U211 SERIES

Ultra-high Purity Regulators

Solutions for Life

U211 series single stage ultra high purity regulator is developed for the semiconductor industry, it is manufactured in accordance with SEMI requirement and assembled, tested and packaged in a class 100 clean room.



U211SLBK-DHP-VSM4-S1



U211SLAK-DHW-VSF4-S1

Features

- 316L or 316L VAR stainless steel body
- Metal to metal diaphragm to body seal
- Easy front panel and rear bracket mounting
- Gauge ports are standard with 1/4″ face seal male
- Fully internal electropolished
- Cleaned, assembled and packaged for ultra-high purity semiconductor applications
- High-cycle life
- 100% Helium-leak tested

Materials

- Body: 316L, 316L VAR
- Seat: PCTFE*, Vespel® (Optional)
- Diaphragm: C-22

*: Standard Material

Specifications

- Max. Inlet Pressure: 500, 3000, 4500 psi
- Max. Outlet Pressure: 25, 50, 100, 150, 250, 500 psi
- Supply Pressure Effect:
  SPE = 0.35 psi / 100 psi (U211), SPE = 0.65 psi / 100 psi (U211A)
- Temperature: -40°F ~ 165°F (-40°C ~ 74°C)
- Flow Capacity:
  U211 Series Cv=0.09, U211A Series Cv=0.15
- Maximum Leak Rate:
  Inboard Leakage: 1 x 10^{-9} atm cc/sec He
  Across Seat Leakage: 4 x 10^{-8} atm cc/sec He
- Proof Pressure: 150% of maximum rated pressure
- Burst Pressure: 400% of maximum rated pressure
- Wetted Surface: Ra 10 µin
- Internal Volume: 8.4 cc

Material Configuration	Noncorrosive		Corrosive
	U211*SL	U211*SLV	U211*SLV***-H
Body	316L	316L VAR	316L VAR
Diaphragm	C-22	C-22	C-22
Stem	316L	316L	C-22
Nozzle	316L	316L	C-22
Seat	PCTFE, Vespel® (Optional)	PCTFE, Vespel® (Optional)	PCTFE, Vespel® (Optional)
Wetted Surface	10 µin	10 µin	10 µin

Dimensions

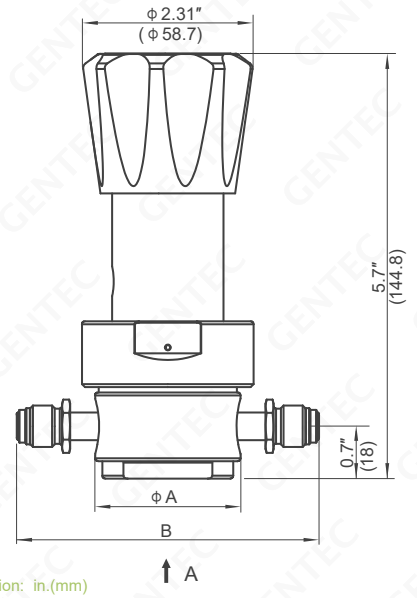

Dimension: in.(mm)

Connection Type		Dimensions A	Dimensions B
VSF4	1/4″ swivel female FSR	1.97″ (50)	3.7″ (94)
VSM4	1/4″ swivel male FSR		3.7″ (94)
VSF8	1/2″ swivel female FSR		4.7″ (119.4)
VSM8	1/2″ swivel male FSR		4.7″ (119.4)
TW4	1/4″ weld stub		2.96″ (75.2)
TW6	3/8″ weld stub		2.96″ (75.2)



A

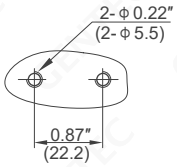

Rear Bracket Mounting

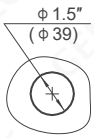

Front Panel Mounting
Maximum thickness
is 0.28″(7.1mm)

Flow Data

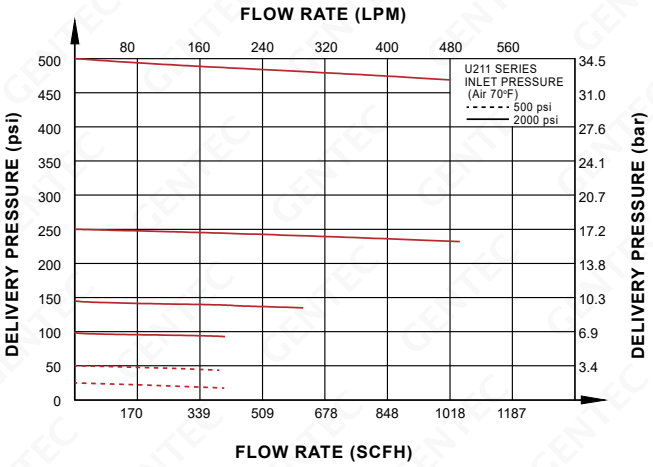

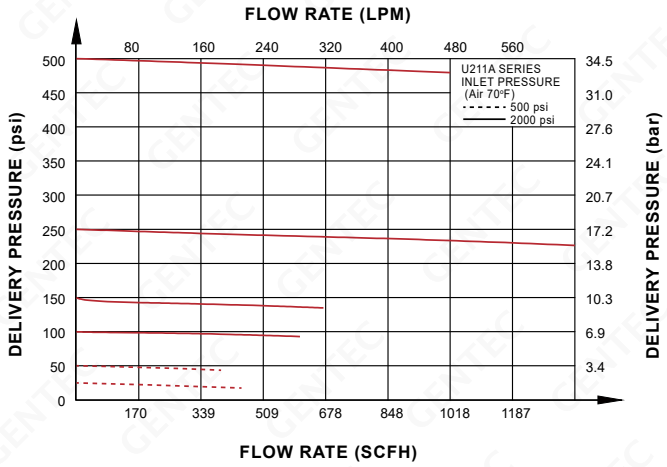

Ordering Information

EX:	U211 Series	SL Body Material	A Body Ports	K Seat Material	- D Inlet Pressure	H Outlet Pressure	P Gauge*	- VSF4 - VSM4 Inlet / Outlet Connection	- H Corrosion Resistance	- P Options	- S1 Process Standard
	U211 U211A	SL: 316L SLV: 316L VAR	A B G	K: PCTFE V: Vespel®	C: 4500 psi D: 3000 psi	F: 0~500 psi G: 0~250 psi H: 0~150 psi I: 0~100 psi	W: Without Gauge P: psi / bar Gauge K: psi / kPa Gauge	VSF4, VSM4, VSF8, VSM8, TW4, TW6 ..... When Inlet and Outlet Connections are the same, please write a connection code.	None: Standard H: C-22 stem and nozzle See Material Configuration table.	None: Rear Bracket Mounting P: Panel Mounting	S1: UHP Process Standard S2: Photovoltaic Process Standard
					F: 500 psi	G: 0~250 psi H: 0~150 psi I: 0~100 psi K: 0~50 psi L: 0~25 psi					

*: Gauges' connection: 1/4″swivel male FSR , other connection type please conect GENTEC.

U21 series single-stage regulators are hand adjustable, pressure reducing regulators for applications ranging from non-corrosive, corrosive, and toxic gases. Our metal-to-metal diaphragm to body seal is designed to minimize leakage and to provide excellent accuracy and longevity.



U21SLGK-DIP-VSF4-P-S2

Features

- 316L or 316L VAR stainless steel body
- Metal to metal diaphragm to body seal
- Easy front panel and rear bracket mounting
- Gauge ports are standard with 1/4″ face seal male
- Fully internal electropolished
- Cleaned, assembled and packaged for ultra-high purity semiconductor applications
- High-cycle life
- 100% Helium-leak tested

Materials

- Body: 316L, 316L VAR
- Seat: PCTFE*, Vespel® (Optional)
- Diaphragm: 316L, C-22

*: Standard Material

Specifications

- Max. Inlet Pressure: 500, 3000 psi
- Max. Outlet Pressure: 25, 50, 100, 250 psi
- Supply Pressure Effect: SPE = 0.55 psi / 100 psi
- Temperature: -40°F ~ 165°F (-40°C ~ 74°C)
- Flow Capacity: Cv=0.14
- Maximum Leak Rate:
  Inboard Leakage: 1 x 10^{-9} atm cc/sec He
  Across Seat Leakage: 4 x 10^{-8} atm cc/sec He
- Proof Pressure: 150% of maximum rated pressure
- Burst Pressure: 400% of maximum rated pressure
- Wetted Surface: Ra 10 µin
- Internal Volume: 4.6 cc

Dimensions

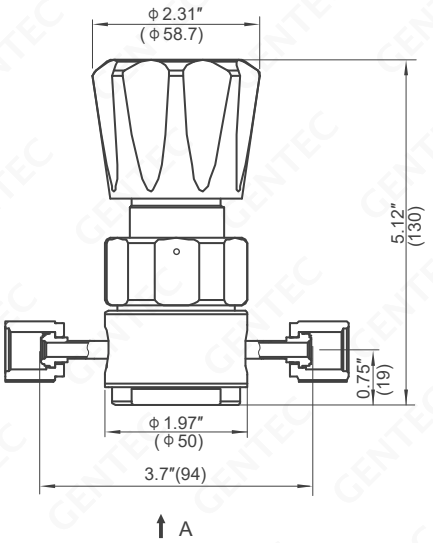



A

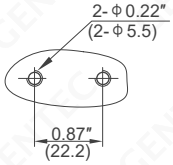

Rear Bracket Mounting

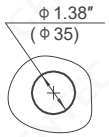

Front Panel Mounting
Maximum thickness
is 0.28″(7.1mm)

Dimension: in.(mm)

Flow Data

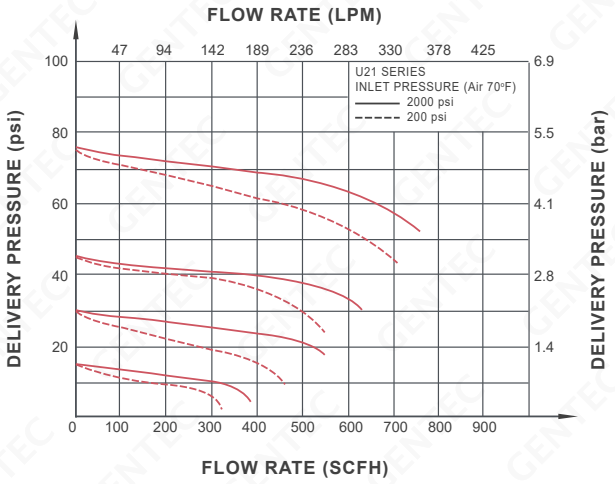

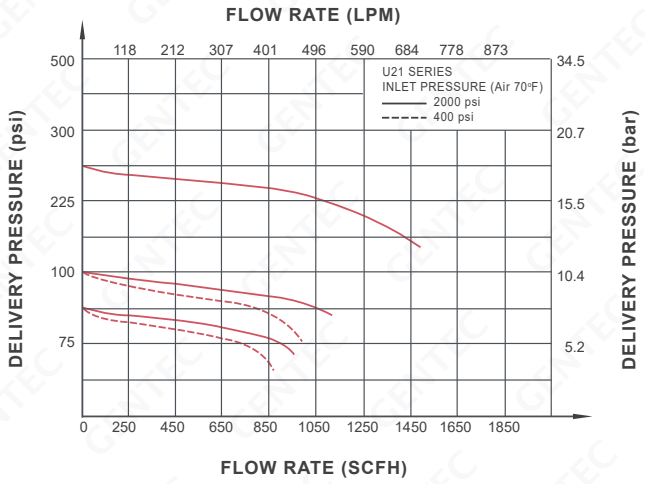

Ordering Information

EX: U21	SL	A	K	- D	I	P	- VSF4 - VSM4	- P	- S1
Series	Body Material	Body Ports	Seat Material	Inlet Pressure	Outlet Pressure	Gauge*	Inlet / Outlet Connection	Options	Process Standard
U21	SL: 316L SLV: 316L VAR	A B G J M	K: PCTFE V: Vespel®	D: 3000 psi F: 500 psi	G: 0~250 psi I: 0~100 psi K: 0~50 psi L: 0~25 psi	W: Without Gauge P: psi / bar Gauge K: psi / kPa Gauge	VSF4, VSM4, TW4 ..... When Inlet and Outlet Connections are the same, please write a connection code.	None: Rear Bracket Mounting P: Panel Mounting H: C-22 Diaphragm	S1: UHP Process Standard S2: Photovoltaic Process Standard

*: Gauges' connection: 1/4″swivel male FSR , other connection type please conect GENTEC.

U22 SERIES

Ultra-high Purity Regulators

Solutions for Life

U22 series single-stage regulators are purge gas, pressure reducing regulators. Applicable to gas system for non-corrosive, corrosive, and toxic gases. Our metal-to-metal diaphragm to body seal is designed to minimize leakage and to provide excellent accuracy and longevity.



Features

- 316L or 316L VAR stainless steel body
- Metal to metal diaphragm to body seal
- Easy front panel and rear bracket mounting
- Gauge ports are standard with 1/4″ face seal male
- Fully internal electropolished
- Cleaned, assembled and packaged for ultra-high purity semiconductor applications
- High-cycle life
- 100% Helium-leak tested

Materials

- Body: 316L, 316L VAR
- Seat: PCTFE*, Vespel® (Optional)
- Diaphragm: 316L, C-22

*: Standard Material

U22SLGK-DIP-VSF8-P-S2

Specifications

- Max. Inlet Pressure: 500, 3000 psi
- Max. Outlet Pressure: 25, 50, 100, 250 psi
- Supply Pressure Effect: SPE = 5.1 psi / 100 psi
- Temperature: -40°F ~ 165°F (-40°C ~ 74°C)
- Flow Capacity: Cv=1.1
- Maximum Leak Rate:
  Inboard Leakage: 1 x 10^{-9} atm cc/sec He
  Across Seat Leakage: 4 x 10^{-8} atm cc/sec He
- Proof Pressure: 150% of maximum rated pressure
- Burst Pressure: 400% of maximum rated pressure
- Wetted Surface: Ra 10 µin
- Internal Volume: 22.6 cc

Dimensions

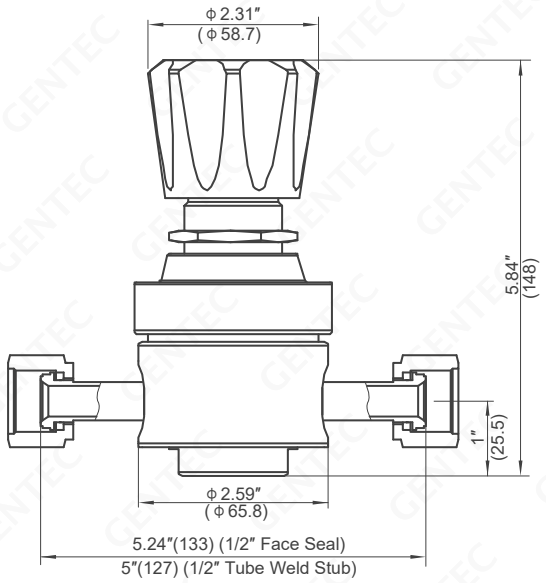

Dimension: in.(mm)

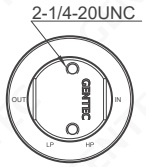

A

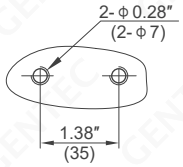

Rear Bracket Mounting

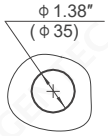

Front Panel Mounting
Maximum thickness
is 0.28″(7.1mm)

Flow Data

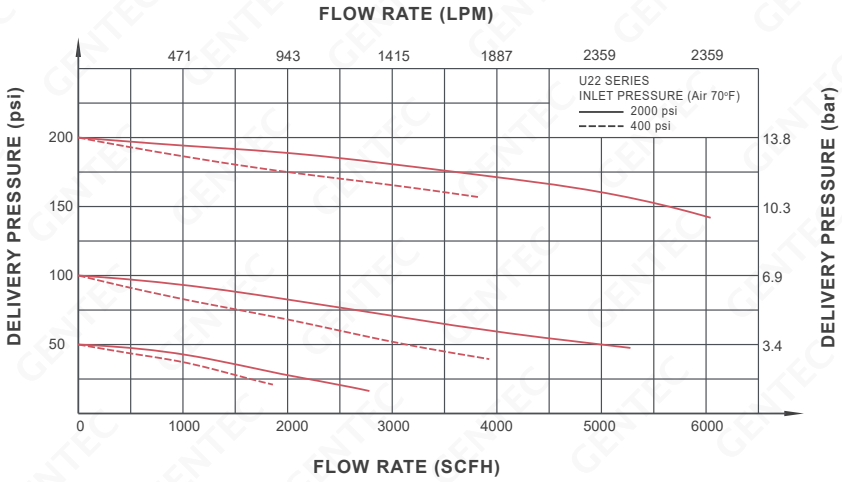

Ordering Information

EX: U22	SL	A	K	- D	I	P	- VSF8 - VSM8	- P	- S1
Series	Body Material	Body Ports	Seat Material	Inlet Pressure	Outlet Pressure	Gauge*	Inlet / Outlet Connection	Options	Process Standard
U22	SL: 316L SLV: 316L VAR	A B G J M	K: PCTFE V: Vespel®	D: 3000 psi	G: 0~250 psi I: 0~100 psi	W: Without Gauge P: psi / bar Gauge K: psi / kPa Gauge	VSF8, VSM8, TW8 ..... When Inlet and Outlet Connections are the same, please write a connection code.	None: Rear Bracket Mounting P: Panel Mounting H: C-22 Diaphragm	S1: UHP Process Standard S2: Photovoltaic Process Standard
				F: 500 psi	G: 0~250 psi I: 0~100 psi K: 0~50 psi L: 0~25 psi				

*: Gauges' connection: 1/4″swivel male FSR , other connection type please conect GENTEC.

U23 series single-stage regulators are ideal purge regulators for low pressure and ultra-high purity systems, especially for heavy duty gas flow applications. Our metal-to-metal diaphragm to body seal is designed to minimize leakage and to provide excellent accuracy and longevity.



U23SLGK-DIP-VSF8-P-S2

Features

- 316L stainless steel body
- Metal to metal diaphragm to body seal
- Easy front panel and rear bracket mounting
- Gauge ports are standard with 1/4″ face seal male
- Fully internal electropolished
- Cleaned, assembled and packaged for ultra-high purity semiconductor applications
- High-cycle life
- 100% Helium-leak tested

Materials

- Body: 316L
- Seat: PCTFE*, Vespel® (Optional)
- Diaphragm: 316L, C-22
- Poppet: 316L

*: Standard Material

Specifications

- Max. Inlet Pressure: 500, 3000 psi
- Max. Outlet Pressure: 25, 50, 100, 150 psi
- Supply Pressure Effect: SPE = 5.1 psi / 100 psi
- Temperature: -40°F ~ 165°F (-40°C ~ 74°C)
- Flow Capacity: Cv=1.8
- Maximum Leak Rate:
  Inboard Leakage: 2 x 10^{-9} atm cc/sec He
  Across Seat Leakage: 4 x 10^{-8} atm cc/sec He
- Proof Pressure: 150% of maximum rated pressure
- Burst Pressure: 400% of maximum rated pressure
- Wetted Surface: Ra 10 µin
- Internal Volume: 59.9 cc

Dimensions

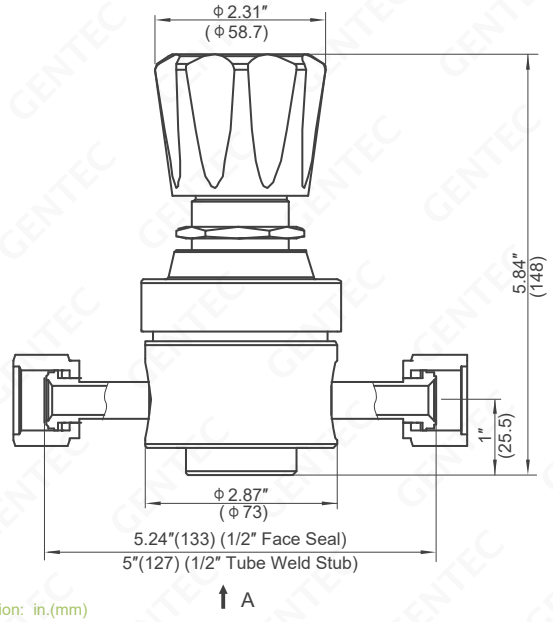

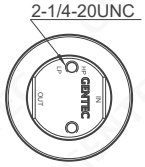

A

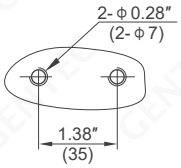

Rear Bracket Mounting

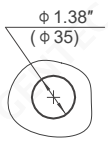

Front Panel Mounting
Maximum thickness
is 0.28″(7.1mm)

Dimension: in.(mm)

Flow Data

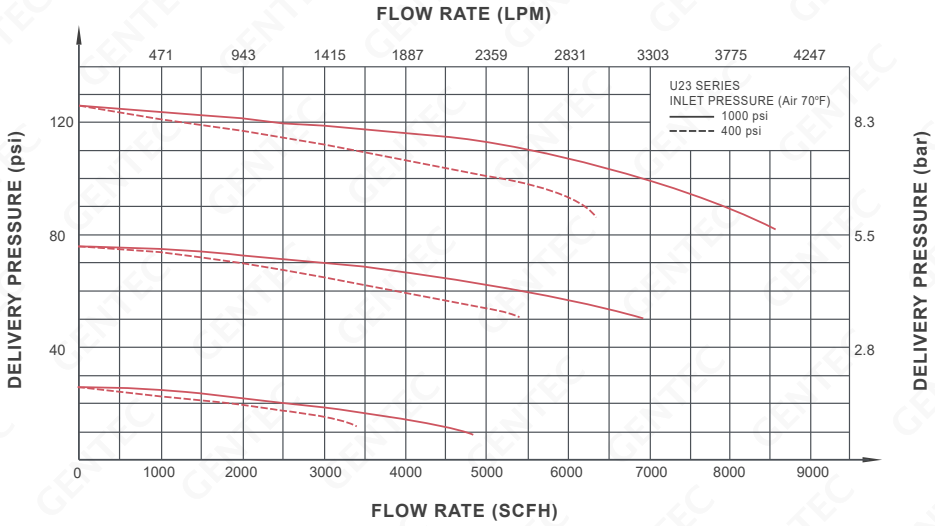

Ordering Information

EX: U23	SL	A	K	- D	I	P	- VSF8 - VSM8	- P	- S1
Series	Body Material	Body Ports	Seat Material	Inlet Pressure	Outlet Pressure	Gauge*	Inlet / Outlet Connection	Options	Process Standard
U23	SL: 316L	A B G J M	K: PCTFE V: Vespel®	D: 3000 psi	H: 0~150 psi I: 0~100 psi	W: Without Gauge P: psi / bar Gauge K: psi / kPa Gauge	VSF8, VSM8, TW8 ..... When Inlet and Outlet Connections are the same, please write a connection code.	None: Rear Bracket Mounting P: Panel Mounting H: C-22 Diaphragm	S1: UHP Process Standard S2: Photovoltaic Process Standard
				F: 500 psi	H: 0~150 psi I: 0~100 psi K: 0~50 psi L: 0~25 psi				

*: Gauges' connection: 1/4″swivel male FSR , other connection type please conect GENTEC.

U31 SERIES

Ultra-high Purity Regulators

Solutions for Life

U31 series dual-stage regulators are hand adjustable, pressure reducing regulators for applications ranging from non-corrosive, corrosive, and toxic gases. Our metal-to-metal diaphragm to body seal is designed to minimize leakage and to provide excellent accuracy and longevity.



U31SLBK-DHP-VSF4-P-S1



U31SLAK-DHW-VSM4-P-S1

Features

- 316L or 316L VAR stainless steel body
- Metal to metal diaphragm to body seal
- Easy front panel mounting
- Gauge ports are standard with 1/4″ face seal male. Internal 1/4″ face seal female is also available
- Fully internal electropolished
- Cleaned, assembled, and packaged for ultra-high purity semiconductor applications
- High-cycle life
- 100% Helium-leak tested

Materials

- Body: 316L, 316L VAR
- Seat: PCTFE*, Vespel® (Optional)
- Diaphragm: C-22

*: Standard Material

Specifications

- Max. Inlet Pressure: 3000, 4500 psi
- Max. Outlet Pressure: 25, 50, 100, 150, 250 psi
- Supply Pressure Effect:
  SPE = 0.04 psi / 100 psi (U31), SPE = 0.06 psi / 100 psi (U31A)
- Temperature: -40°F ~ 165°F (-40°C ~ 74°C)
- Flow Capacity:
  U31 Series Cv=0.05, U31A Series Cv=0.07
- Maximum Leak Rate:
  Inboard Leakage: 1 x 10^{-9} atm cc/sec He
  Across Seat Leakage: 4 x 10^{-8} atm cc/sec He
- Proof Pressure: 150% of maximum rated pressure
- Burst Pressure: 400% of maximum rated pressure
- Wetted Surface: Ra 10 µin
- Internal Volume: 15.1 cc

Material Configuration	Noncorrosive		Corrosive
	U31*SL	U31*SLV	U31*SLV***-H
Body	316L	316L VAR	316L VAR
Diaphragm	C-22	C-22	C-22
Stem	316L	316L	C-22
Nozzle	316L	316L	C-22
Seat	PCTFE, Vespel® (Optional)	PCTFE, Vespel® (Optional)	PCTFE, Vespel® (Optional)
Wetted Surface	10 µin	10 µin	10 µin

Dimensions

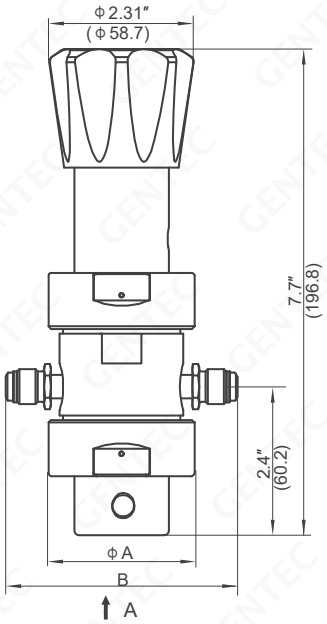

Dimension: in.(mm)

Connection Type		Dimensions A	Dimensions B
VSF4	1/4″ swivel female FSR	2.25″ (57.2)	3.7″ (94)
VSM4	1/4″ swivel male FSR		3.7″ (94)
VSF8	1/2″ swivel female FSR		4.7″ (119.4)
VSM8	1/2″ swivel male FSR		4.7″ (119.4)
TW4	1/4″ weld stub		2.96″ (75.2)
TW6	3/8″ weld stub		2.96″ (75.2)

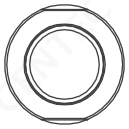

A

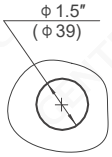

Front Panel Mounting
Maximum thickness
is 0.28″(7.1mm)

Flow Data

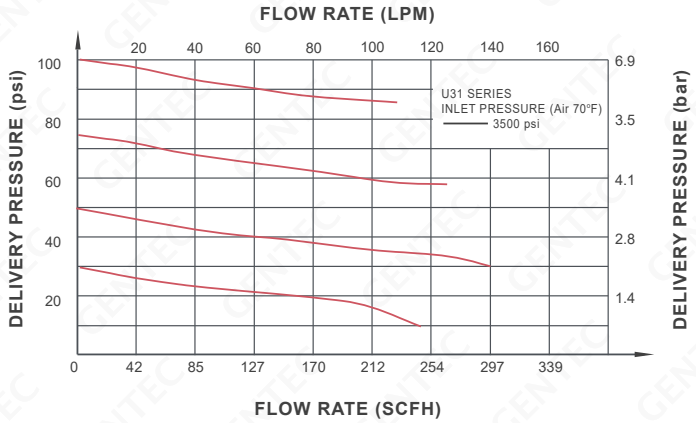

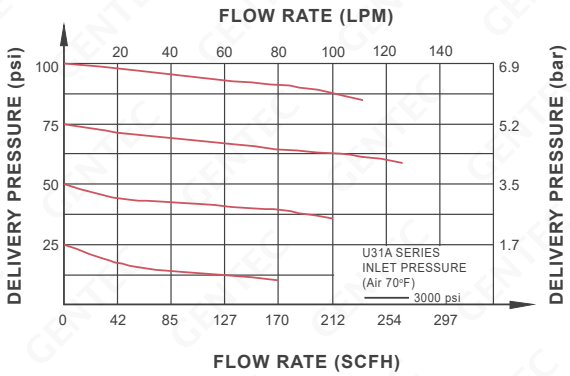

Ordering Information

EX: U31	SL	A	K	- D	H	P	- VSF4 - VSM4	- H	- P	- S1
Series	Body Material	Body Ports	Seat Material	Inlet Pressure	Outlet Pressure	Gauge*	Inlet / Outlet Connection	Corrosion Resistance	Options	Process Standard
U31 U31A	SL: 316L SLV: 316L VAR	A B G	K: PCTFE V: Vespel®	C: 4500 psi D: 3000 psi	G: 0~250 psi H: 0~150 psi I: 0~100 psi K: 0~50 psi L: 0~25 psi	W: Without Gauge P: psi / bar Gauge K: psi / kPa Gauge	VSF4, VSM4, VSF8, VSM8, TW4, TW6 ..... When Inlet and Outlet Connections are the same, please write a connection code.	None: Standard H: C-22 stem and nozzle See Material Configuration table.	P: Panel Mounting	S1: UHP Process Standard S2: Photovoltaic Process Standard

*: Gauges' connection: 1/4″swivel male FSR , other connection type please conect GENTEC.

U41 SERIES

Ultra-high Purity Regulators

Solutions for Life

U41 series bellow regulators are hand adjustable, pressure reducing regulators for applications ranging from non-corrosive, corrosive, and toxic gases. Our metal-to-metal diaphragm to body seal is designed to minimize leakage and to provide excellent accuracy and longevity.



U41SLBK-DEP-VSM4-S1

Features

- 316L stainless steel body
- Based on the proven bellow technogy
- Bellow seal valves to safeguard against leakage
- Easy front panel and rear bracket mounting
- Gauge ports are standard with 1/4″ face seal male
- Fully internal electropolished
- Cleaned, assembled, and packaged for ultra-high purity semiconductor applications
- High-cycle life
- 100% Helium-leak tested

Materials

- Body: 316L
- Seat: PCTFE*, Vespel® (Optional)
- Bellow: 316L

*: Standard Material



U41SLAK-DEW-VSF4-S1

Specifications

- Max. Inlet Pressure: 3000 psi
- Max. Outlet Pressure: 500, 1500 psi
- Supply Pressure Effect: SPE = 4.3 psi / 100 psi
- Temperature: -40°F ~ 165°F (-40°C ~ 74°C)
- Flow Capacity: Cv=0.14
- Maximum Leak Rate:
  Inboard Leakage: 1 x 10^{-9} atm cc/sec He
  Across Seat Leakage: 4 x 10^{-8} atm cc/sec He
- Proof Pressure: 150% of maximum rated pressure
- Burst Pressure: 400% of maximum rated pressure
- Wetted Surface: Ra 10 µin
- Internal Volume: 4.5 cc

Dimensions

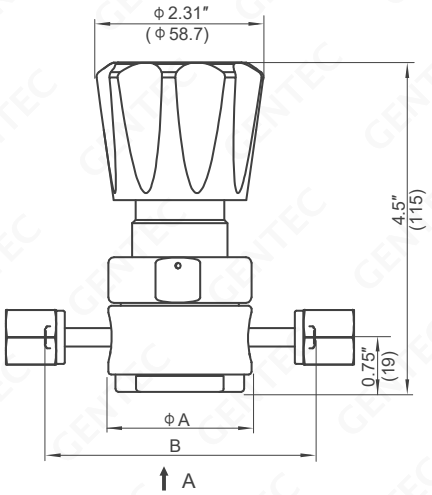

Connection Type		Dimensions A	Dimensions B
VSF4	1/4″ swivel female FSR	1.97″ (50)	3.7″ (94)
VSM4	1/4″ swivel male FSR		3.7″ (94)
VSF8	1/2″ swivel female FSR		4.7″ (119.4)
VSM8	1/2″ swivel male FSR		4.7″ (119.4)
TW4	1/4″ weld stub		2.96″ (75.2)
TW6	3/8″ weld stub		2.96″ (75.2)



A

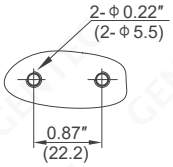

Rear Bracket Mounting



Front Panel Mounting
Maximum thickness
is 0.28″(7.1mm)

Dimension: in.(mm)

Flow Data

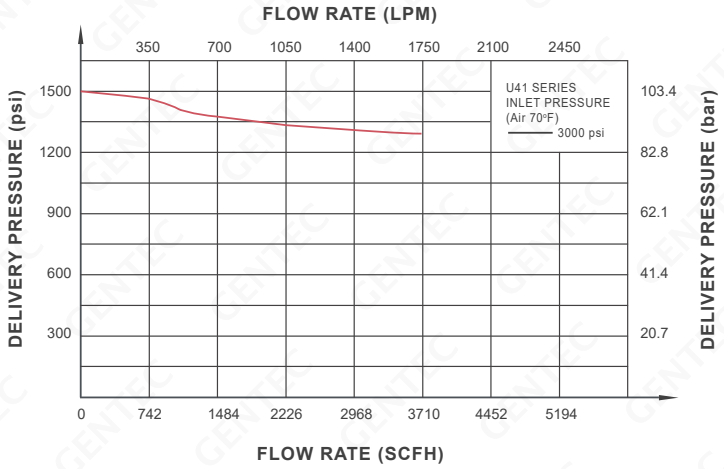

Ordering Information

EX: U41	SL	A	K	- D	E	P	- VSF4 - VSM4	- P	- S1
Series	Body Material	Body Ports	Seat Material	Inlet Pressure	Outlet Pressure	Gauge*	Inlet / Outlet Connection	Options	Process Standard
U41	SL: 316L	A B G	K: PCTFE V: Vespel®	D: 3000 psi	E: 0~1500 psi F: 0~500 psi	W: Without Gauge P: psi / bar Gauge K: psi / kPa Gauge	VSF4, VSM4, VSF8, VSM8, TW4, TW6 ..... When Inlet and Outlet Connections are the same, please write a connection code.	None: Rear Bracket Mounting P: Panel Mounting	S1: UHP Process Standard S2: Photovoltaic Process Standard

*: Gauges' connection: 1/4″swivel male FSR , other connection type please conect GENTEC.

U61 SERIES

Ultra-high Purity Regulators

Solutions for Life

U61 series Tied-diaphragm ultra-high purity regulator is developed for the semiconductor industry, it is manufactured in accordance with SEMI requirement and assembled, tested and packaged in a Class 100 (ISO 5) cleanroom.



U61SLAK-DHW-VSF8-S1

Features

- 316L stainless steel body
- Based on the proven bellow technogy
- Bellow seal valves to safeguard against leakage
- Rear bracket mounting
- Gauge ports are standard with 1/4″ face seal male
- Fully internal electropolished
- Cleaned, assembled, and packaged for ultra-high purity semiconductor applications
- High-cycle life
- 100% Helium-leak tested

Materials

- Body: 316L
- Seat: PCTFE*, Vespel® (Optional)
- Bellow: 316L, C-22

*: Standard Material

Specifications

- Max. Inlet Pressure: 500, 1500, 2200, 3000 psi
- Max. Outlet Pressure: 25, 50, 100, 150, 250 psi
- Supply Pressure Effect:
  SPE = 4.3 psi / 100 psi (U61), SPE =5.7 psi / 100 psi (U61A)
- Temperature: -40°F ~ 165°F (-40°C ~ 74°C)
- Flow Capacity:
  U61 Series Cv=3.0, U61A Series Cv=4.0
- Maximum Leak Rate:
  Inboard Leakage: 1 x 10^{-9} atm cc/sec He
  Across Seat Leakage: 4 x 10^{-8} atm cc/sec He
- Proof Pressure: 150% of maximum rated pressure
- Burst Pressure: 400% of maximum rated pressure
- Wetted Surface: Ra 10 µin
- Internal Volume: 197 cc

Material Configuration	Noncorrosive	
	U61*SL	U61*SL***-H
Body	316L	316L
Bellow	316L	C-22
Stem	316L	C-22
Nozzle	316L	C-22
Seat	PCTFE, Vespel® (Optional)	PCTFE, Vespel® (Optional)
Wetted Surface	10 µin	10 µin

Dimensions

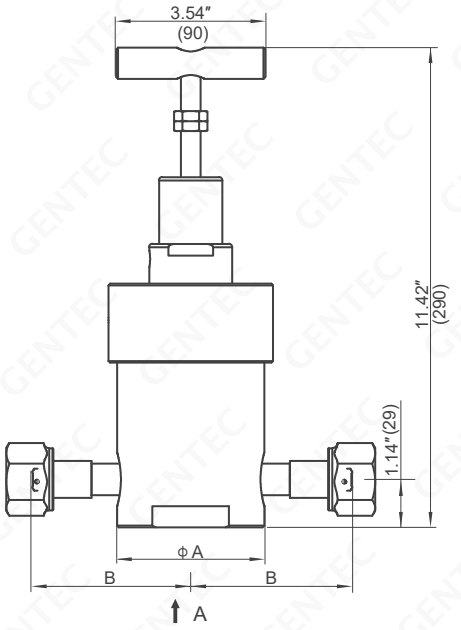

Dimension: in.(mm)

Connection Type		Dimensions A	Dimensions B
VSF8	1/2″ swivel female FSR	3.5″ (89)	3.11″ (79)
VSM8	1/2″ swivel male FSR		3.11″ (79)
VSF12	3/4″ swivel female FSR		3.64″ (92.5)
VSM12	3/4″ swivel male FSR		3.64″ (92.5)
VSF16	1″ swivel female FSR		3.92″ (99.6)
VSM16	1″ swivel male FSR		3.92″ (99.6)
TW12	3/4″ weld stub		4.75″ (120.7)
TW16	1″ weld stub		4.75″ (120.7)

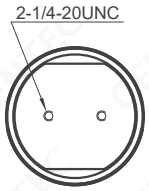

A

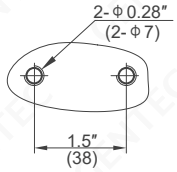

Rear Bracket Mounting

Flow Data

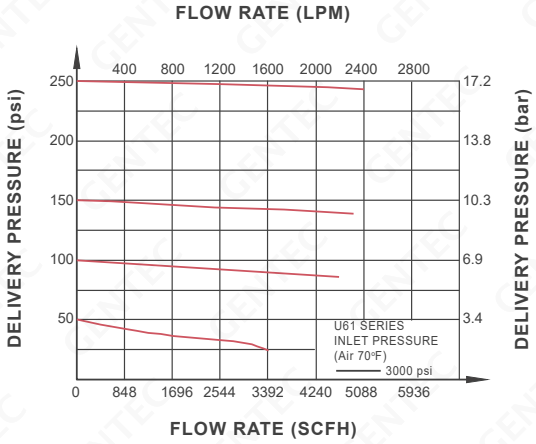

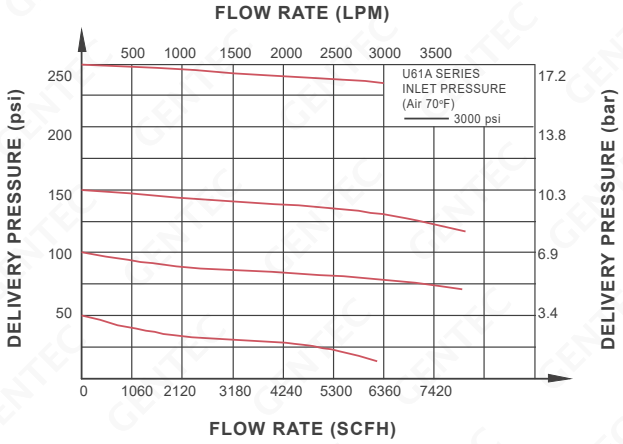

Ordering Information

EX: U61	SL	A	K	- D	H	W	- VSF4 - VSM4	- H	- S1
Series	Body Material	Body Ports	Seat Material	Inlet Pressure	Outlet Pressure	Gauge*	Inlet / Outlet Connection	Corrosion Resistance	Process Standard
U61 U61A	SL: 316L	A B G	K: PCTFE V: Vespel®	D: 3000 psi X: 2200 psi E: 1500 psi	G: 0 ~ 250 psi H: 0 ~ 150 psi I: 0 ~ 100 psi	W: Without Gauge P: psi / bar Gauge K: psi / kPa Gauge	VSF8, VSM8, VSF12, VSM12, TW12, TW12	None: Standard H: C-22 stem and nozzle	S1: UHP Process Standard S2: Photovoltaic Process Standard
				F: 500 psi	G: 0 ~ 250 psi H: 0 ~ 150 psi I: 0 ~ 100 psi K: 0 ~ 50 psi L: 0 ~ 25 psi		When Inlet and Outlet Connections are the same, please write a connection code.	See Material Configuration table.	

*: Gauges' connection: 1/4″swivel male FSR , other connection type please conect GENTEC.

U71 SERIES

Ultra-high Purity Back Pressure Regulators

Solutions for Life

U71 Series Diaphragm Back Pressure Regulator is developed for the semiconductor industry, it is manufactured in accordance with SEMI requirement and assembled, tested and packaged in a Class 100 (ISO 5) cleanroom.



U71SLAK-GW-VSF4-S2

Features

- 316L or 316L VAR stainless steel body
- Metal to metal diaphragm to body seal
- Easy front panel and rear bracket mounting
- Gauge ports are standard with 1/4” face seal male
- Fully internal electropolished
- Cleaned, assembled, and packaged for high-purity semi-conductor applications
- High-cycle life
- 100% Helium-leak tested

Materials

- Body: 316L, 316L VAR
- Seat: PCTFE
- Diaphragm: 316L, C-22 (Optional)

Specifications

- Maximum Working Pressure: 500 psi
- Back Pressure Range: 0~25 psi, 0~50 psi, 0~75 psi , 0~100 psi, 0~150 psi, 0~250 psi
- Temperature Range: -40°F ~ 165°F(-40°C ~ 74°C)
- Cv: 0.08
- Inboard Leakage: $1x10^{-9}$ atm/sec He
- Proof Pressure: 150% of maximum rated pressure
- Burst Pressure: 400% of maximum rated pressure
- Surface Finish: 10 uin
- Internal Volume: 5.2 cc

Dimensions

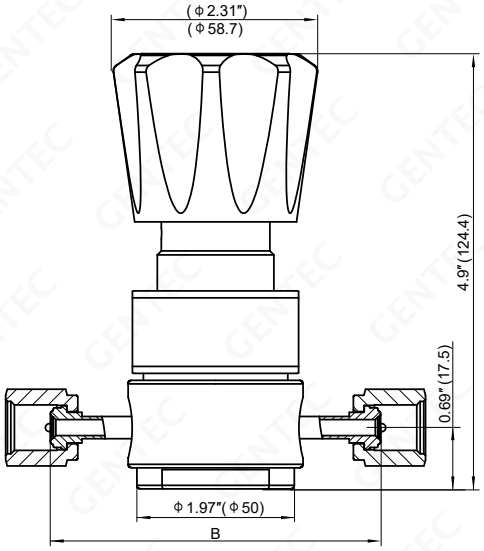

Connection Type		Dimensions B
VSF4	1/4" swivel female FSR	3.7" (94)
VSM4	1/4" swivel male FSR	3.7" (94)
VSF8	1/2" swivel female FSR	4.7" (119.4)
VSM8	1/2" swivel male FSR	4.7" (119.4)

Dimension: in.(mm)

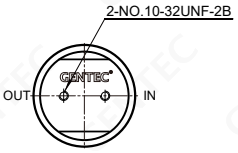

A

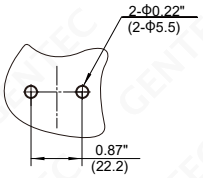

Rear Bracket Mounting

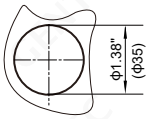

Front Panel Mounting
Maximum thickness
is 0.28"(7.1mm)

Flow Data

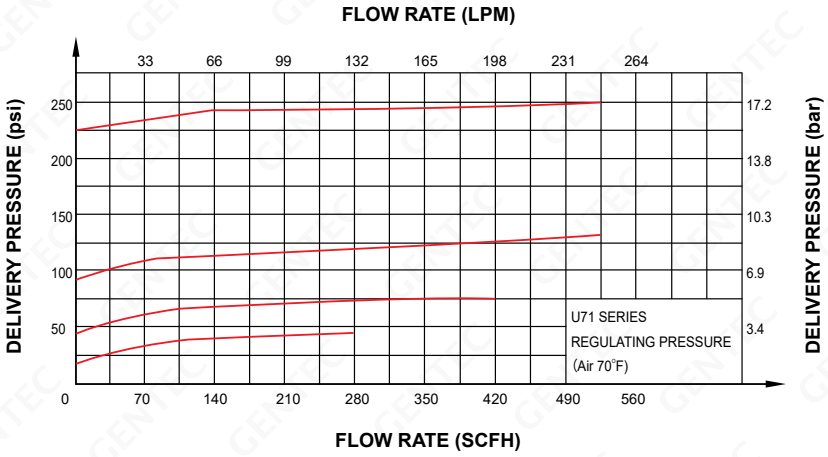

Ordering Information

EX: U71	SL	A	K	- H	W	- VSF4 - VSM4	- H	- P	- S2
Series	Body Material	Body Ports	Seat Material	Back Pressure Range	Gauge*	Inlet / Outlet Connection	Corrosion Resistance	Options	Process Standard
U71	SL: 316L SLV: 316L VAR	A D	K: PCTFE	G: 0 ~ 250 psi H: 0 ~ 150 psi I: 0 ~ 100 psi J: 0 ~ 75 psi K: 0 ~ 50 psi L: 0 ~ 25 psi	W: Without Gauge P: psi / bar Gauge K: psi / kPa Gauge	VSF4, VSM4, VSF8, VSM8, ... When Inlet and Outlet Connections are the same, please write a connection code.	None: 316L H: C-22 Diaphragm	None: Rear Bracket Mounting P: Panel Mounting	S1: UHP Process Standard S2: Photovoltaic Process Standard

*: Gauges' connection: 1/4"swivel male FSR , other connection type please conect GENTEC.

U72 Series Diaphragm Back Pressure Regulator is developed for the semiconductor industry, it is manufactured in accordance with SEMI requirement and assembled, tested and packaged in a Class 100 (ISO 5) cleanroom.



U72SLAK-TW-VSF4-S2

Features

- 316L or 316L VAR stainless steel body
- Metal to metal diaphragm to body seal
- Easy front panel and rear bracket mounting
- Gauge ports are standard with 1/4” face seal male
- Fully internal electropolished
- Cleaned, assembled, and packaged for high-purity semi-conductor applications
- High-cycle life
- 100% Helium-leak tested

Materials

- Body: 316L, 316L VAR
- Seat: PCTFE
- Diaphragm: C-22

Specifications

- Maximum Working Pressure: 500 psi
- Back Pressure Range: 0~25 psi, 0~50 psi, 0~75 psi , 0~100 psi, 0~150 psi, 0~200 psi
- Temperature Range: -40°F ~ 165°F(-40°C ~ 74°C)
- Cv: 0.04
- Inboard Leakage: $1x10^{-9}$ atm/sec He
- Proof Pressure: 150% of maximum rated pressure
- Burst Pressure: 400% of maximum rated pressure
- Surface Finish: 10 uin
- Internal Volume: 17.8 cc

Dimensions

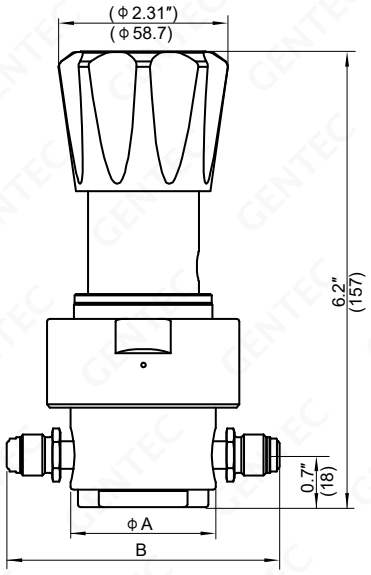

Dimension: in.(mm)

Connection Type		Dimensions A	Dimensions B
VSF4	1/4" swivel female FSR	2" (50.8)	3.7" (94)
VSM4	1/4" swivel male FSR		4" (101.6)
VSF8	1/2" swivel female FSR	2.5" (63.5)	5.22" (132.6)
VSM8	1/2" swivel male FSR		5.22" (132.6)
TW4	1/4" weld stub		4" (101.6)
TW6	3/8" weld stub		4.34" (110.2)

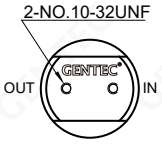

A

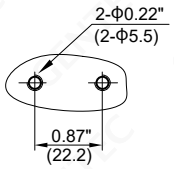

Rear Bracket Mounting

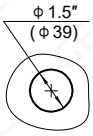

Front Panel Mounting
Maximum thickness
is 0.28"(7.1mm)

Flow Data

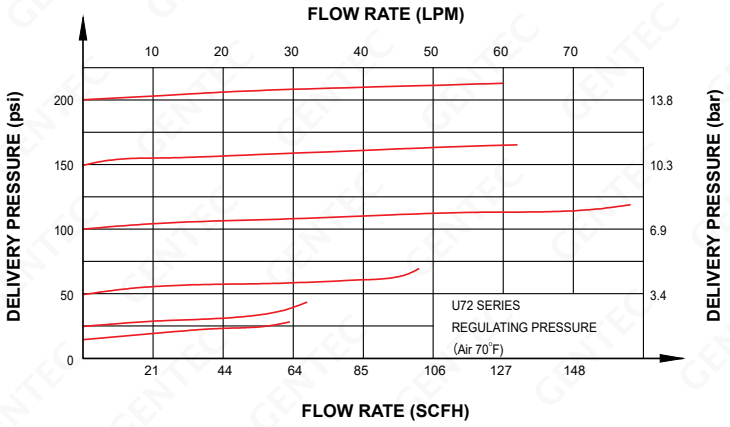

Ordering Information

EX: U72	SL	A	K	- T	W	- VSF4 - VSM4	- H	- P	- S2
Series	Body Material	Body Ports	Seat Material	Back Pressure Range	Gauge*	Inlet / Outlet Connection	Corrosion Resistance	Options	Process Standard
U72	SL: 316L SLV: 316L VAR	A D	K: PCTFE	T: 0 ~ 200 psi H: 0 ~ 150 psi I: 0 ~ 100 psi J: 0 ~ 75 psi K: 0 ~ 50 psi L: 0 ~ 25 psi	W: Without Gauge P: psi / bar Gauge K: psi / kPa Gauge	VSF4, VSM4, VSF8, VSM8, TW6, TW8 ..... When Inlet and Outlet Connections are the same, please write a connection code.	None: 316L stem and nozzle H: C-22 stem and nozzle	None: Rear Bracket Mounting P: Panel Mounting	S1: UHP Process Standard S2: Photovoltaic Process Standard

*: Gauges' connection: 1/4"swivel male FSR , other connection type please conect GENTEC.

U73 SERIES

Ultra-high Purity Back Pressure Regulators

Solutions for Life

U73 Series Diaphragm Back Pressure Regulator is developed for the semiconductor industry, it is manufactured in accordance with SEMI requirement and assembled, tested and packaged in a Class 100 (ISO 5) cleanroom.



U73SLAK-TW-VSF4-S2

Features

- 316L or 316L VAR stainless steel body
- Metal to metal diaphragm to body seal
- Easy front panel and rear bracket mounting
- Gauge ports are standard with 1/4” face seal male
- Fully internal electropolished
- Cleaned, assembled, and packaged for high-purity semi-conductor applications
- High-cycle life
- 100% Helium-leak tested

Materials

- Body: 316L, 316L VAR
- Seat: PCTFE
- Diaphragm: C-22

Specifications

- Maximum Working Pressure: 500 psi
- Back Pressure Range: 0~25 psi, 0~50 psi, 0~75 psi , 0~100 psi, 0~150 psi, 0~200 psi
- Temperature Range: -40°F ~ 165°F(-40°C ~ 74°C)
- Cv: 0.3
- Inboard Leakage: $1x10^{-9}$ atm/sec He
- Proof Pressure: 150% of maximum rated pressure
- Burst Pressure: 400% of maximum rated pressure
- Surface Finish: 10 uin
- Internal Volume: 16 cc

Dimensions

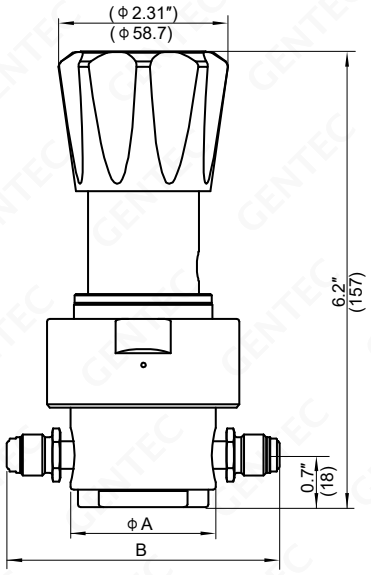

Dimension: in.(mm)

Connection Type		Dimensions A	Dimensions B
VSF4	1/4″ swivel female FSR	2″ (50.8)	3.7″ (94)
VSM4	1/4″ swivel male FSR		4″ (101.6)
VSF8	1/2″ swivel female FSR	2.5″ (63.5)	5.22″ (132.6)
VSM8	1/2″ swivel male FSR		5.22″ (132.6)
TW4	1/4″ weld stub		4″ (101.6)
TW6	3/8″ weld stub		4.34″ (110.2)

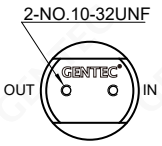

A

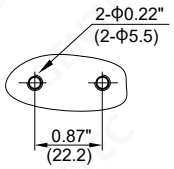

Rear Bracket Mounting

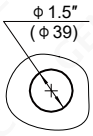

Front Panel Mounting
Maximum thickness
is 0.28″(7.1mm)

Flow Data

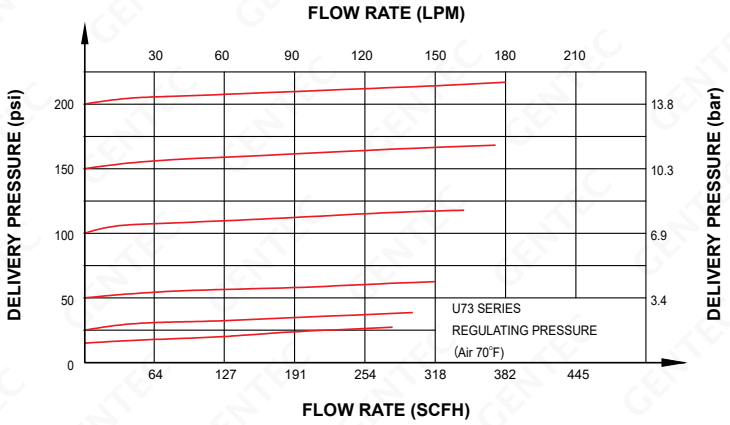

Ordering Information

EX: U73	SL	A	K	- T	W	- VSF4 - VSM4	- H	- P	- S2
Series	Body Material	Body Ports	Seat Material	Back Pressure Range	Gauge*	Inlet / Outlet Connection	Corrosion Resistance	Options	Process Standard
U73	SL: 316L SLV: 316L VAR	A D	K: PCTFE	T: 0 ~ 200 psi H: 0 ~ 150 psi I: 0 ~ 100 psi J: 0 ~ 75 psi K: 0 ~ 50 psi L: 0 ~ 25 psi	W: Without Gauge P: psi / bar Gauge K: psi / kPa Gauge	VSF4, VSM4, VSF8, VSM8, TW6, TW8 ..... When Inlet and Outlet Connections are the same, please write a connection code.	None: 316L stem and nozzle H: C-22 stem and nozzle	None: Rear Bracket Mounting P: Panel Mounting	S1: UHP Process Standard S2: Photovoltaic Process Standard

*: Gauges' connection: 1/4″swivel male FSR , other connection type please conect GENTEC.

U74 Series Diaphragm Back Pressure Regulator is developed for the semiconductor industry, it is manufactured in accordance with SEMI requirement and assembled, tested and packaged in a Class 100 (ISO 5) cleanroom.



U74SLAQ-GW-VSF4-H-S2

Features

- 316L or 316L VAR stainless steel body
- Metal to metal diaphragm to body seal
- Easy front panel and rear bracket mounting
- Gauge ports are standard with 1/4” face seal male
- Fully internal electropolished
- Cleaned, assembled, and packaged for high-purity semi-conductor applications
- High-cycle life
- 100% Helium-leak tested

Materials

- Body: 316L, 316L VAR
- Seat: FFKM
- Diaphragm: C-22

Specifications

- Maximum Working Pressure: 500 psi
- Back Pressure Range: 0~25 psi, 0~50 psi, 0~75 psi , 0~100 psi, 0~150 psi, 0~250 psi
- Temperature Range: -40°F ~ 165°F(-40°C ~ 74°C)
- Cv: 0.3
- Inboard Leakage: $1x10^{-9}$ atm/sec He
- Proof Pressure: 150% of maximum rated pressure
- Burst Pressure: 400% of maximum rated pressure
- Surface Finish: 10 uin
- Internal Volume: 8.4 cc

Dimensions

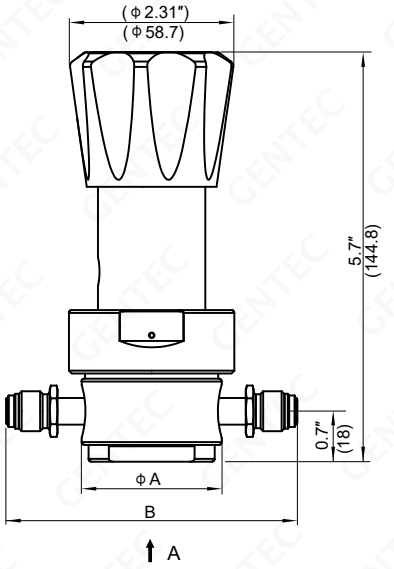

Connection Type		Dimensions A	Dimensions B
VSF4	1/4″ swivel female FSR	2″ (50.8)	3.7″ (94)
VSM4	1/4″ swivel male FSR		3.7″ (94)
VSF8	1/2″ swivel female FSR		4.7″ (119.4)
VSM8	1/2″ swivel male FSR		4.7″ (119.4)
TW4	1/4″ weld stub		2.96″ (75.2)
TW6	3/8″ weld stub		2.96″ (75.2)



A

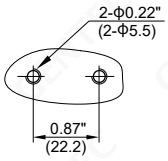

Rear Bracket Mounting

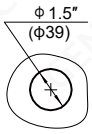

Front Panel Mounting
Maximum thickness
is 0.28″(7.1mm)

Dimension: in.(mm)

Flow Data

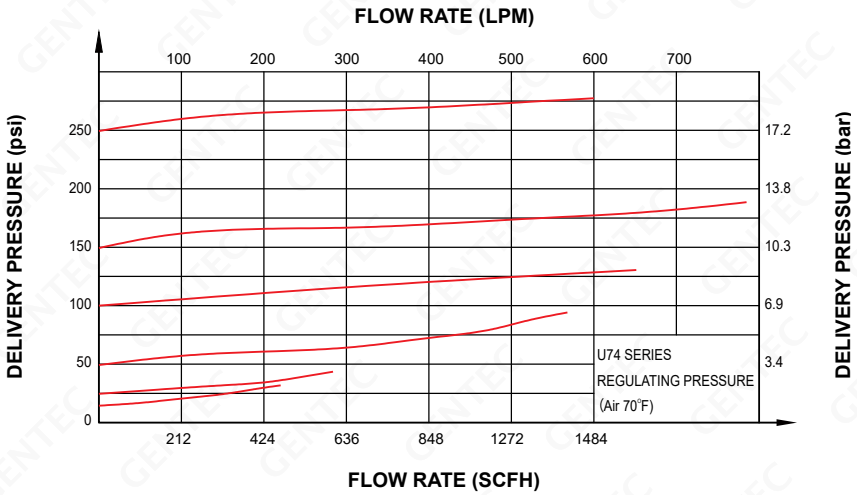

Ordering Information

EX: U74	SL	A	Q	- G	W	- VSF4 - VSM4	- H	- P	- S2
Series	Body Material	Body Ports	Seat Material	Back Pressure Range	Gauge*	Inlet / Outlet Connection	Corrosion Resistance	Options	Process Standard
U74	SL: 316L SLV: 316L VAR	A D	Q: FFKM	G: 0 ~ 250 psi H: 0 ~ 150 psi I: 0 ~ 100 psi J: 0 ~ 75 psi K: 0 ~ 50 psi L: 0 ~ 25 psi	W: Without Gauge P: psi / bar Gauge K: psi / kPa Gauge	VSF4, VSM4, VSF8, VSM8, ... When Inlet and Outlet Connections are the same, please write a connection code.	None: 316L nozzle H: C-22 nozzle	None: Rear Bracket Mounting P: Panel Mounting	S1: UHP Process Standard S2: Photovoltaic Process Standard



UHP VALVES

DV, MDV, ALD, BDV, V, CV & MV Series

100% Helium Leak Test



Control Knob

- Diaphragm design for smooth operation
- Easy to read status window (Open / Close)

Inlet / Outlet Connections

- Multiple inlet/outlet connections: FSR, TW

Body

- Fabricated from Stainless Steel: 316L, 316L VAR or 316L VIM VAR
- Fabricated with advanced CNC machines to produce the highest quality of parts
- Wetted area are electropolished
- Co-Ni Super Alloy diaphragm produce metal to metal, leak-proof seal

Process Specificaion

Cleaning	Assembly and Packaging	Process Code	Process Standard
Ultra-high purity cleaning with continuously monitored deionized water ultrasonic cleaning system	Assembled and packaged in a Class 100 (ISO 5) cleanroom, then double vacuum sealed to ensure optimal cleanliness and protection	S1	Ultra-high Purity (UHP) Process Standard
Ultra-high purity cleaning with continuously monitored deionized water ultrasonic cleaning system	Assembled and individually packaged in a controlled clean environment	S2	Photovoltaic Process Standard



SL-DV56PL-VM4-K-S2



SL-DV56NL-VM4-K-S1

Features

- Suitable for ultra-high purity applications
- Face seal fittings (FSR) connections
- Internally springless
- Metal-to-metal diaphragm seals
- High-cycle life
- 100% Helium-leak tested

Materials

- Body: 316L
- Seat: PCTFE
- Diaphragm: Co-Ni Super Alloy

Specifications

- Flow Capacity: Cv=0.3
- Maximum Leak Rate:
  Body Leak Rate: 1 x 10^{-9} atm cc/sec He
  Valve Seat Leak Rate: 4 x 10^{-9} atm cc/sec He
- Proof Pressure: 150% of maximum working pressure
- Burst Pressure: 400% of maximum working pressure

Operating Conditions

- Maximum Operating Pressure: 300 psi
- Minimum Operating Pressure: vacuum
- Temperature: -40°F to 150°F (-40°C to 65°C)

Actuator Specifications

- Operating Pressure: 70 ~ 125 psi
- Inlet Connection: 1/8″ NPT (Female)
- Working Status: Normally Closed or Normally Open

Wetted Surface

- Wetted Surface: Ra 7 µin

Internal Volume

- Internal Volume: 1.6 cc

Dimensions

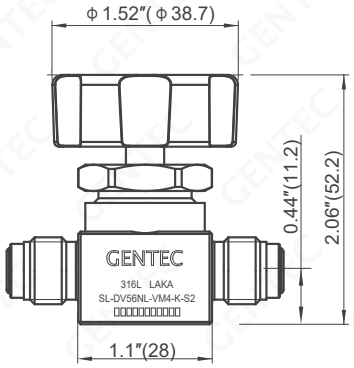

Handwheel (without Display)

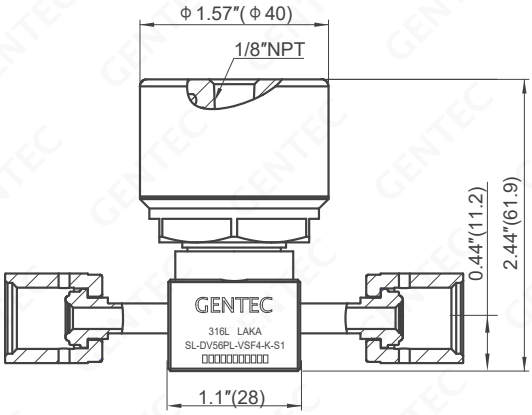

Pneumatic Actuator
(Normally closed)

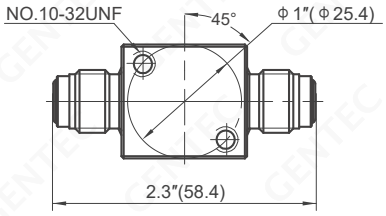

VM4

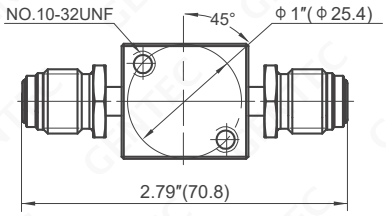

VSM4

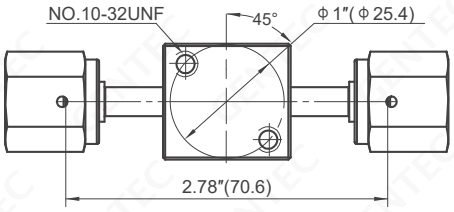

VSF4

Dimension: in.(mm)

Ordering Information

EX:	SL	- DV56	P	L	- VM4	- K	- NO	- S1
	Body Material	Valve Series	Actuation	Working Pressure	Inlet / Outlet Connection*	Seat Material	Options	Process Standard
	SL: 316L	DV56	N: Handwheel (without display) P: Pneumatic actuator	L: 300 psi	VM4: 1/4” male FSR VSM4: 1/4” swivel male FSR VSF4: 1/4” swivel female FSR ..... Please contact GENTEC for more information	K: PCTFE	Blank: Standard (Normally closed) NO: Normally open (Pneumatic, low pressure)	S1: UHP Process Standard S2: Photovoltaic Process Standard

*: When the inlet and outlet connections are identical, only one code should be provided. If they differ, the first code corresponds to the inlet connection, while the second code is for the outlet connection.



SL-DV74MHI-VSM4-S2



SL-DV74PHB-TW6-S2

Features

- Suitable for ultra-high purity applications
- 316L stainless steel enhances weldability and resistance to corrosion
- Manual or pneumatic actuation are available
- Face seal fittings (FSR) or butt weld connections
- Internally springless
- Metal-to-metal diaphragm design creates a leak resistant seal
- Control knob includes a window indicating working status (i.e. open or closed)
- 100% helium leak tested
- Multiple port configurations available
- Electropolished

Materials

- Body: 316L
- Seat: PCTFE*, Vespel®**
- Diaphragm: Co-Ni Super Alloy

Specifications

- Flow Capacity: Cv=0.3
- Maximum Leak Rate:
  Body Leak Rate: 1 x 10^{-9} atm cc/sec He
  Valve Seat Leak Rate: 4 x 10^{-9} atm cc/sec He
- Proof Pressure: 150% of maximum working pressure
- Burst Pressure: 400% of maximum working pressure

Operating Conditions

- Maximum Operating Pressure: 300, 3500 psi
- Minimum Operating Pressure: vacuum
- Temperature: -40°F ~ 150°F (-40°C ~ 65°C)

Actuator Specifications

- Operating pressure: 70 ~ 125 psi
- Inlet connection: 1/8″ NPT (Female), M5 (Female)
- Working Status: Normally Closed or Normally Open

Wetted Surface

- Wetted Surface: Ra 7 µin

Internal Volume

- Internal Volume: 1.6 cc

* Standard Material

** Vespel® seat is recommended for Nitrous Oxide (N2O) service but is not available for low pressure pneumatic actuation.

Dimensions

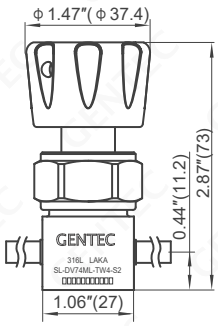

Handwheel (300 psi)

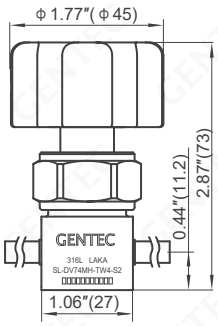

Handwheel (3500 psi)

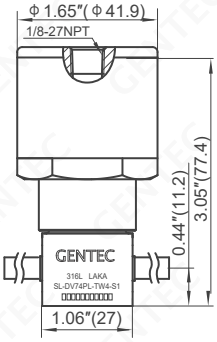

Pneumatic (300 psi)

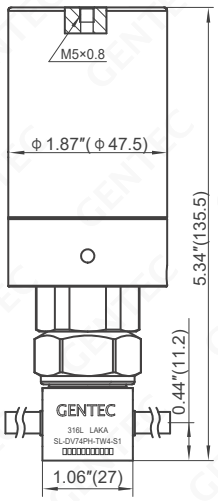

Pneumatic (3500 psi)

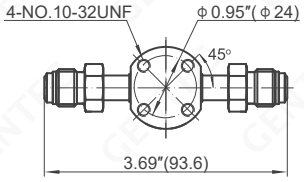

VSM4

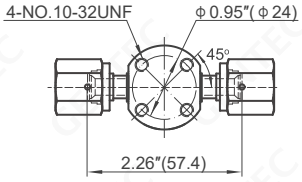

VSF4

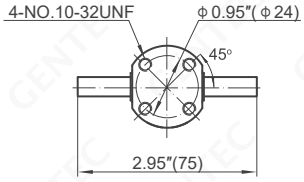

TW4

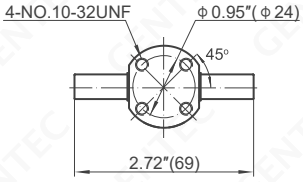

TW6

Flow Type

Types	Elbow	Three-way			Four-way		Rear-entry	
Flow Schematic	P	B	C	D	I	J	A	T
Red arrow indicates inlet, Blue arrow indicates outlet*		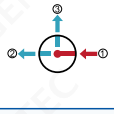	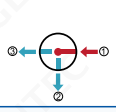	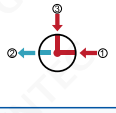	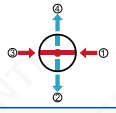			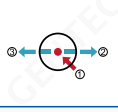
Flow Schematic	**Q**	**E**	**F**	**H**	**K**	**L**	**R**	
Red arrow indicates inlet, Blue arrow indicates outlet*	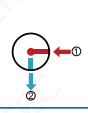	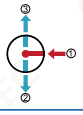	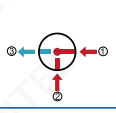	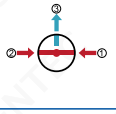				

*: All schematics are from top view

Ordering Information

EX: SL	-DV74	M	H	B	- VSM4	- K	- NO	- S1
Body Material	Valve Series	Actuation	Working Pressure	Flow Path	Inlet / Outlet Connection*	Seat Material	Options	Process Standard
SL: 316L	DV74	M: Handwheel (with Display) P: Pneumatic Actuator (Normally Closed)	H: 3500 psi L: 300 psi	Blank: In-line Type **Elbow Type** P: Right inlet, top outlet Q: Right inlet, bottom outlet **Three-way valve** B: Right inlet, left / top outlet C: Right inlet, left / bottom outlet D: Right / top inlet, left outlet E: Right inlet, top / bottom outlet F: Top / bottom inlet, left outlet H: Left / right inlet, top outlet **Four-way valve** I: Left / right inlet, top / bottom outlet J: Right inlet, left / top / bottom outlet K: Right / bottom inlet, left / top outlet L: Left / bottom / right inlet, top outlet **Rear-entry valve** A: Rear inlet, right outlet T: Rear inlet, left / right outlet R: Rear inlet, left / right / top / bottom outlet	TW4, TW6, VSM4, VSF4 ..... Please contact GENTEC for more information	K: PCTFE V: Vespel®	Blank: Standard (Normally closed) NO: Normally open (Pneumatic)	S1: UHP Process Standard S2: Photovoltaic Process Standard

*: When the inlet and outlet connections are identical, only one code should be provided. If they differ, the first code corresponds to the inlet connection, while the second code is for the outlet connection, and is written in numbered order.

DV81 series ultra-high purity diaphragm valves are suitable for high-purity application scenarios and can be used in high-purity pipeline gas supply systems, storage containers, etc.



SL-DV81MH-SW4-K-S1

Features

- Suitable for ultra-high purity applications
- Metal-to-metal diaphragm seals
- Face seal fittings (FSR), Socket welded or butt welded connections
- Valve core is designed to be replaceable
- High-cycle life
- 100% Helium-leak tested

Materials

- Body: 316L
- Seat: PCTFE
- Diaphragm: Co-Ni Super Alloy
- Knob: Anodized Aluminum Alloy

Specifications

- Flow capacity: Cv=0.3
- Maximum Leak Rate:
  Body Leak Rate: 4 x 10^{-9} atm cc/sec He
  Valve Seat Leak Rate: 4 x 10^{-9} atm cc/sec He
- Proof Pressure: 150% of maximum working pressure
- Burst Pressure: 400% of maximum working pressure

Operating Conditions

- Maximum Operating Pressure: 300, 3500 psi
- Minimum operating pressure: vacuum
- Temperature: -100°F to 250°F (-73°C to 121°C)

Temperatures	Working Pressure
-100°F (-73°C) ~ 100°F(37°C)	3000 psi
200°F (93°C)	2950 psi
250°F (121°C)	2800 psi

Wetted Surface

- Wetted Surface: Ra 8 µin

Internal Volume

- Internal Volume: 2.9 cc

Dimensions

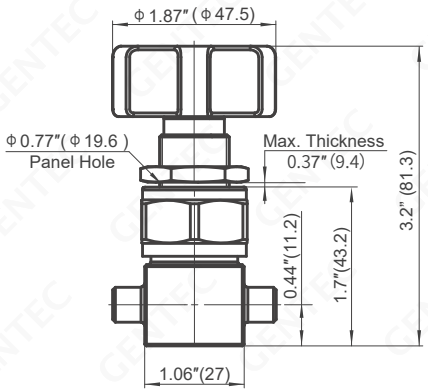

Handwheel

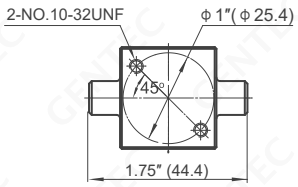

SM

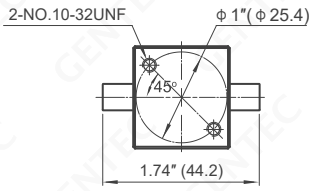

TW6

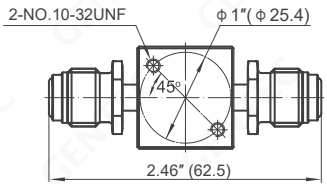

VSM8

Dimension: in.(mm)

Ordering Information

EX: SL	- DV81	M	H	- SW4	- K	- BK	- S1
Body Material	Valve Series	Actuation	Working Pressure	Inlet / Outlet Connection*	Seat Material	Knob Color	Process Standard
SL: 316L	DV81	M: Manual	H: 3500 psi L: 300 psi	SW4: 1/4″ socket stub TW4: 1/4″ weld stub VSM4: 1/4″ swivel male FSR ..... Please contact GENTEC for more information	K: PCTFE	Blank: Green (Standard) BK: Black B: Blue R: Red	S1: UHP Process Standard S2: Photovoltaic Process Standard

*: When the inlet and outlet connections are identical, only one code should be provided. If they differ, the first code corresponds to the inlet connection, while the second code is for the outlet connection.



SL-DV85PL-VSM8-K-S2



SL-DV85BL-VSM8-K-S1

Features

- Suitable for ultra-high purity applications
- Both manual and pneumatic actuation are available
- Face seal fittings (FSR) or butt welded connections
- Detachable valve seat
- Handgrip or Round Window indicating working status
- 1/4 turn of the handle to operate from fully open to closed / Indicator window
- 100% Helium-leak tested

Materials

- Body: 316L, 316L VAR
- Seat: PCTFE, Vespel®
- Diaphragm: Co-Ni Super Alloy

Specifications

- Flow capacity: Cv=0.5
- Maximum Leak Rate:
  Body Leak Rate: 1 x 10^{-9} atm cc/sec He
  Valve Seat Leak Rate: 1 x 10^{-9} atm cc/sec He
- Proof Pressure: 150% of maximum working pressure
- Burst Pressure: 400% of maximum working pressure

Operating Conditions

- Maximum operating pressure: 300 psi
- Minimum operating pressure: vacuum
- Temperature: -40°F to 160°F (-40°C to 71°C)

Actuator Specifications

- Operating pressure: 70 ~ 125 psi
- Inlet connection: 1/8″ NPT (Female), M5 (Female)
- Working Status: Normally Closed

Wetted Surface

- Wetted Surface: Ra 7 µin

Internal Volume

- Internal Volume: 9.0 cc

Dimensions

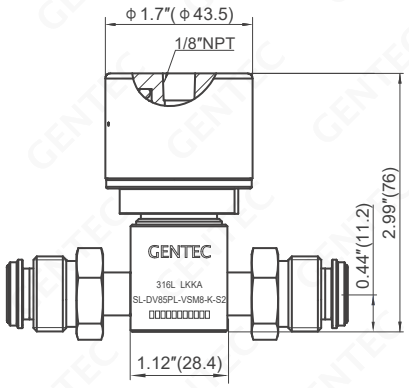

Pneumatic Actuator

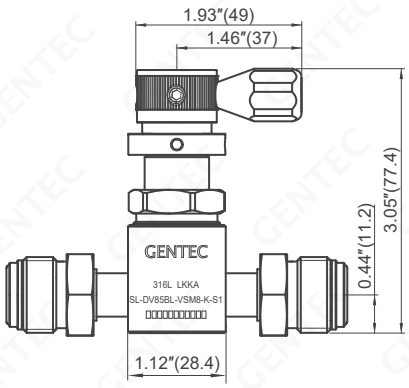

Handgrip

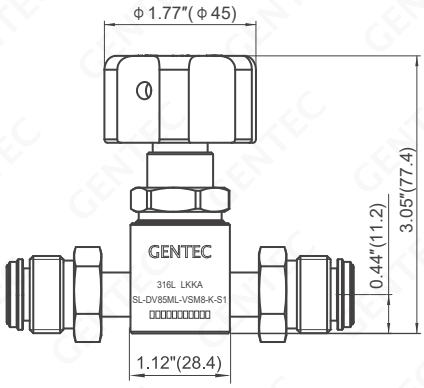

Handwheel (With Display)

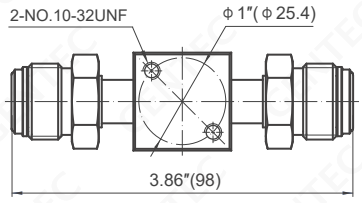

VSM8

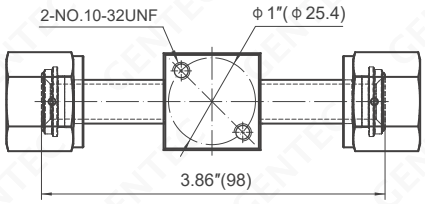

VSF8

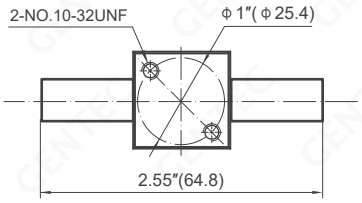

TW8

Dimension: in.(mm)

Ordering Information

EX: SL	- DV85	M	L	- VSM4	- K	- NO	- S1
Body Material	**Valve Series**	**Actuation**	**Working Pressure**	**Inlet / Outlet Connection***	**Seat Material**	**Options**	**Process Standard**
SL: 316L SLV: 316L VAR	DV85	B: Handgrip M: Handwheel (with display), 90° switch P: Pneumatic actuator (Normally closed)	L: 300 psi	VSM4: 1/4" swivel male FSR VSF4: 1/4" swivel female FSR TW8: 1/2" weld stub ..... Please contact GENTEC for more information	K: PCTFE V: Vespel®	Blank: Standard (Normally closed) IS: Electronic indicator	S1: UHP Process Standard S2: Photovoltaic Process Standard

*: When the inlet and outlet connections are identical, only one code should be provided. If they differ, the first code corresponds to the inlet connection, while the second code is for the outlet connection.
IS: Electrical Indicator Switch for pneumatic actuator.

DV86 SERIES

Ultra-high Purity Diaphragm Valves

Solutions for Life

DV86 series ultra-high purity diaphragm valves are designed for ultra-high purity gas systems in the semiconductor and photovoltaic industries.



SL-DV86MH-VM4-K-S2



SL-DV86BL-VM4-K-S1



SL-DV86LL-VM4-K-S1



SL-DV86PH-VM8-K-S2



SL-DV86PL-VM4-K-S1

Features

- 316L or 316L VAR stainless steel body
- Both manual and pneumatic actuation are available
- Optional LOTO handle for Lockout/Tagout safety procedure
- Face seal fittings (FSR) or butt weld connections
- Internal spring-less design and metal-to-metal seal minimizes particle generation and ensures “purity integrity” in the flow passages
- Cleaned and degreased for oxygen service according to CGA G-4.1 and ASTM G93 Class C, respectively
- High-cycle life
- 100% Helium-leak tested

Materials

- Body: 316L, 316L VAR
- Seat: PCTFE*, Vespel®**
- Diaphragm: Co-Ni Super Alloy

Specifications

- Flow Capacity
  Cv=0.25 (LOTO), Cv=0.3 (Others)
- Maximum Leak Rate:
  Body Leak Rate: 1 x 10^{-9} atm cc/sec He
  Valve Seat Leak Rate: 4 x 10^{-9} atm cc/sec He
- Proof Pressure: 150% of maximum working pressure
- Burst Pressure: 400% of maximum working pressure

Operating Conditions

- Maximum Operating Pressure: 300, 3500 psi
- Minimum Operating Pressure: vacuum
- Temperature: -40°F ~ 150°F (-40°C ~ 65°C)
- Pneumatic Actuator
  Operating Pressure: 70 ~ 125 psi
  Inlet Connection: 1/8″ NPT (Female), M5 (Female)
- Working Status: Normally Closed or Normally Open

Wetted Surface

- Wetted Surface: Ra 7 µin

Internal Volume

- Internal Volume: 1.6 cc

* Standard Material
** Vespel® seat is recommended for Nitrous Oxide (N2O) service but is not available for low pressure pneumatic actuation.

Dimensions

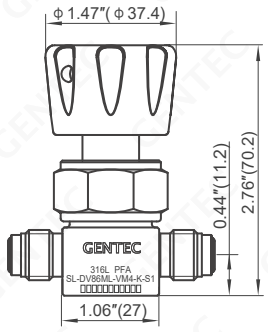

Handwheel (300 psi)

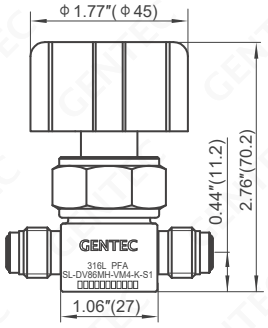

Handwheel (3500 psi)

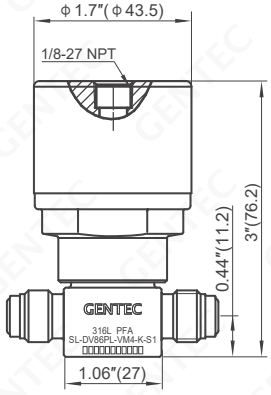

Pneumatic (300 psi)

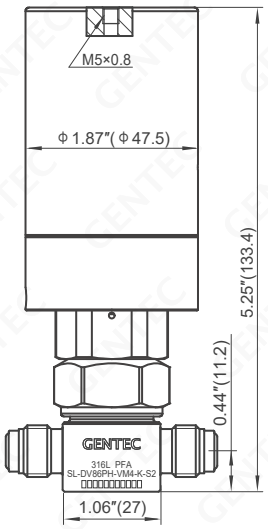

Pneumatic (3500 psi)

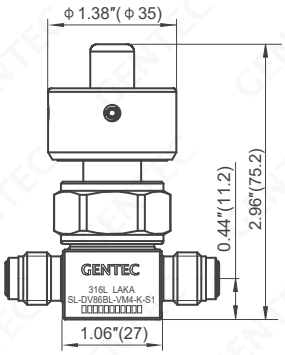

Handgrip (300 psi)

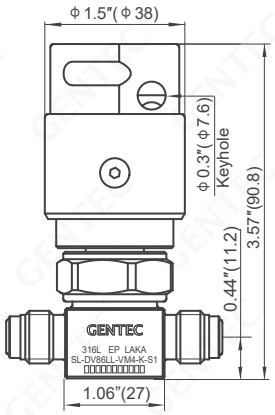

LOTO Handle (300 psi)

Connection Type		A Dimensions
VM4	1/4″ male FSR	2.30″ (58.4)
VM8	1/2″ male FSR	2.66″ (67.6)
VSM4	1/4″ swivel male FSR	2.79″ (70.8)
VSF4	1/4″ swivel female FSR	2.78″ (70.6)
TW4	1/4″ weld stub	1.74″ (44.2)
TW6	3/8″ weld stub	1.74″ (44.2)
TW8	1/2″ weld stub	1.74″ (44.2)

*: Applies to both inlet & outlet connections.

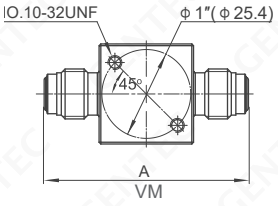

VM

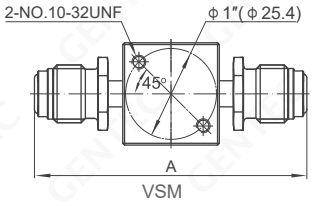

VSM

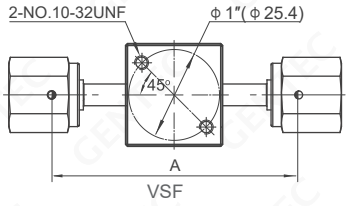

VSF

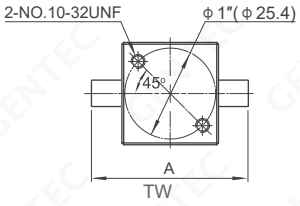

TW

Dimension: in.(mm)

Ordering Information

EX: SL	- DV86	M	L	- VM4	- K	- IS	- S1
Body Material	Valve Series	Actuation	Working Pressure	Inlet / Outlet Connection*	Seat Material	Options	Process Standard
SL: 316L SLV: 316L VAR	DV86	M: Handwheel (with display), 90° switch P: Pneumatic actuator (Normally closed)	H: 3500 psi L: 300 psi	VM4, VM8, VSM4, VSF4, TW4, TW6, TW8 ..... Please contact GENTEC for more information	K: PCTFE V: Vespel®	Blank: Standard (Normally closed) NO: Normally open (for 300 psi pneumatic only) IS: Electronic indicator (for 3500 psi pneumatic only)	S1: UHP Process Standard S2: Photovoltaic Process Standard
		B: Handgrip L: LOTO Handle	L: 300 psi				

*: When the inlet and outlet connections are identical, only one code should be provided. If they differ, the first code corresponds to the inlet connection, while the second code is for the outlet connection.
IS: Electrical Indicator Switch for high pressure pneumatic actuator.



SL-MDV86PL-A-VSF4-K-S1



SL-MDV86PL-A-VSF4-K-S2

Features

- Suitable for ultra-high purity applications
- 316L Stainless Steel enhances weldability and resistance to corrosion
- Both manual and pneumatic actuation are available
- Face seal fittings (FSR) or butt weld connections
- Internally spring-less design
- Metal-to-metal seal minimizes particle generation and ensures “purity integrity” in the flow pasages
- 100% Helium-leak tested

Materials

- Body: 316L, 316L VAR
- Seat: PCTFE*, Vespel®**
- Diaphragm: Co-Ni Super Alloy

Specifications

- Flow Capacity:
  Cv=0.3 (Pneumatic), Cv=0.25 (Manual)
- Maximum Leak Rate:
  Body Leak Rate: 1 x 10^{-9} atm cc/sec He
  Valve Seat Leak Rate: 4 x 10^{-9} atm cc/sec He
- Proof Pressure: 150% of maximum working pressure
- Burst Pressure: 400% of maximum working pressure

Operating Conditions

- Maximum Operating Pressure: 300, 3500 psi
- Minimum Operating Pressure: vacuum
- Temperature: -40°F ~ 150°F (-40°C ~ 65°C)
- Pneumatic Actuator
  Operating Pressure: 70 ~ 125 psi
  Inlet Connection: 1/8″ NPT (Female)
- Working Status: Normally Closed or Normally Open

Wetted Surface

- Wetted Surface: Ra 7 μin

Internal Volume

- Internal Volume: 3.22 cc

* Standard Material
** Vespel® seat is recommended for Nitrous Oxide (N2O) service but is not available for low pressure pneumatic actuation.

Dimensions

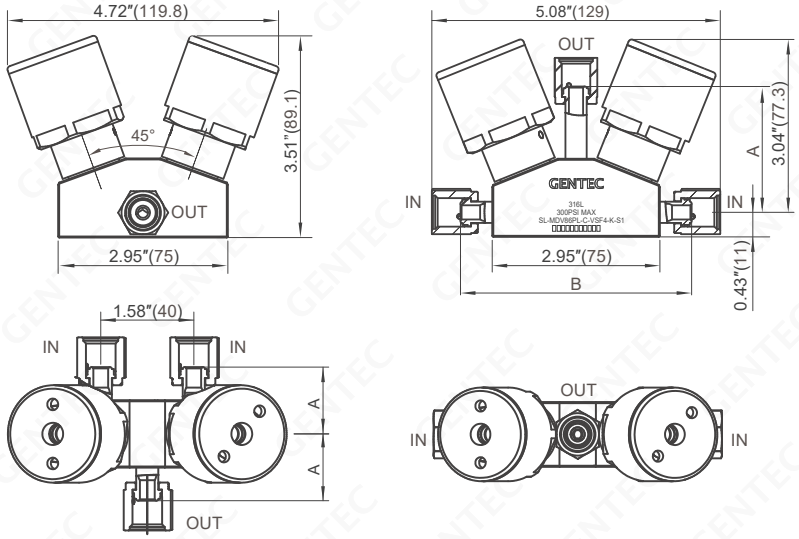

Type	Dimensions in.(mm)		
	A (Parallel Outlet)	A (Vertical Outlet)	B (Vertical Outlet)
VSM4	1.84 (46.8)	2.76 (70.0)	5.50 (139.6)
VSF4	1.13 (28.7)	2.26 (57.3)	4.07 (103.4)
TW6	1.36 (34.5)	2.24 (57.0)	4.53 (115.0)
TW4	2.03 (51.5)	2.44 (62.0)	5.87 (149.0)

Dimension: in.(mm)

Flow Diagram

Parallel Outlet



A: Two Inlets / One Outlet



B: One inlet / Two outlets

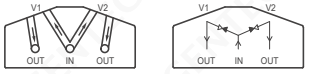

F: One inlet / Right and Left Outlets

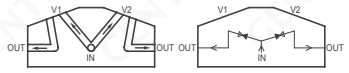

Vertical Outlet



C: Two Inlets / One Outlet

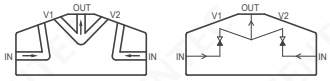

D: One inlet / Two outlets

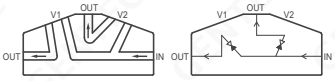

E: Top Inlet / Right and Left Outlets

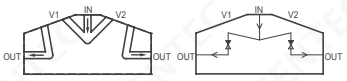

G: Top and Left Inlets / Right Outlet

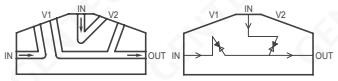

Ordering Information

EX: SL	-MDV86 P	L	- A	- VSF4	- K	- NO	- S1
Body Material	Valve Series	Actuation	Working Pressure	Flow Path	Inlet / Outlet Connection*	Seat Material	Options	Process Standard
SL: 316L SLV: 316L VAR	MDV86	M: Handwheel (with display), 90° switch P: Pneumatic actuator (Normally closed)	H: 3500 psi L: 300 psi	A B F C D E G See Flow Diagram	VSM4, VSF4, TW4, TW6 ..... Please contact GENTEC for more information	K: PCTFE V: Vespel®	Blank: Standard (Normally closed) NO: Normally open (for 300 psi Pneumatic only) NC: Normally closed (for 300 psi Pneumatic only) IS: Electronic indicator (for 3500 psi Pneumatic only)	S1: UHP Process Standard S2: Photovoltaic Process Standard

*: When the inlet and outlet connections are identical, only one code should be provided. If they differ, the first code corresponds to the inlet connection, while the second code is for the outlet connection.
IS: Electrical Indicator Switch for high pressure pneumatic actuator.

DV87 SERIES

Ultra-high Purity Diaphragm Valves

Solutions for Life

DV87 series ultra-high purity diaphragm valves are designed for low pressure and high flow ultra-high purity gas systems in the semiconductor and photovoltaic industries.



SL-DV87ML-VM8-K-S1



SL-DV87PS-VM8-K-S1



SL-DV87LL-VM8-K-S1



SL-DV87PS-VSF8-K-NO-S2

Features

- Suitable for ultra-high purity applications
- Both manual and pneumatic actuation are available
- Optional LOTO handle for Lockout/Tagout safety procedure
- Low dead volume < 3.0 cc
- Cleaned and degreased for oxygen service according to CGA G-4.1 and ASTM G93 Class C, respectively
- Internal spring-less design and metal-to-metal seal minimize particle generation and ensures “purity integrity” in the flow pasages
- High-cycle life
- 100% Helium-leak tested

Materials

- Body: 316L, 316L VAR
- Seat: PCTFE, Vespel® (Optional)
- Diaphragm: Co-Ni Super Alloy

Specifications

- Flow Capacity: Cv=0.65
- Maximum Leak Rate
  Inboard: $1x10^{-9}$ atm cc/sec He
  Outboard: $4x10^{-9}$ atm cc/sec He
- Proof pressure: 150% of maximum rated pressure
- Burst pressure: 400% of maximum rated pressure

Operating Conditions

- Maximum Operating Pressure:
  150 psi (Pneumatic), 300 psi (Manual)
- Minimum Working Pressure: Vacuum
- Temperature: -40°C ~ 65°C (-40°F ~ 150°F)

Pneumatic Actuator Specifications

- Driving Pressure: 60 ~ 85 psi
- Inlet Connection: M5 (Female)
- Working Status: Normally Closed or Normally Open

Wetted Surface

- Wetted Surface: Ra 7 µin

Internal Volume

- Internal Volume: 6.9 cc

Dimensions

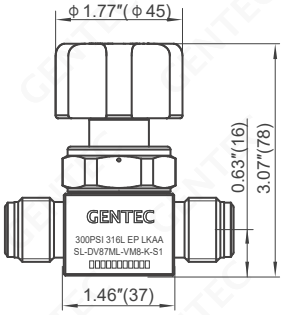

Handwheel

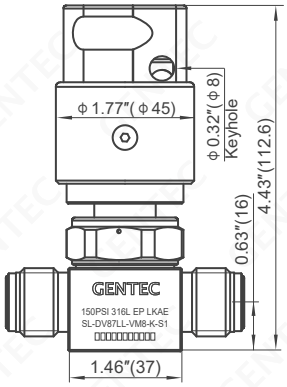

LOTO Handle

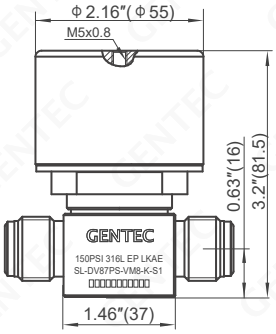

Pneumatic (Normally Closed)

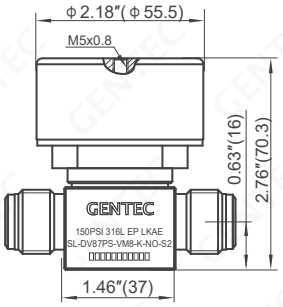

Pneumatic (Normally Open)

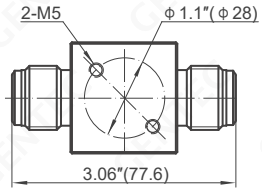

VM8

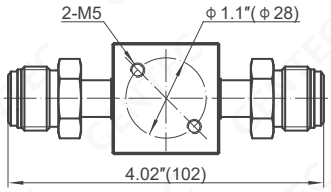

VSM8

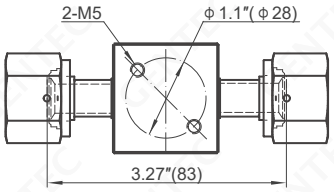

VSF8

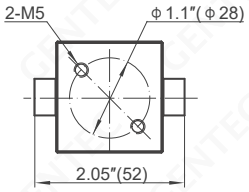

TW8

Dimension: in.(mm)

Ordering Information

EX:	SL	- DV87	P	S	- VM8	- K	- NO	- S1
	Body Material	Valve Series	Actuation	Working Pressure	Inlet / Outlet Connection*	Seat Material	Options	Process Standard
	SL: 316L SLV: 316L VAR	DV87	M: Handwheel (with display), 90° switch L: LOTO Handle	L: 300 psi	VM8: 1/2” male FSR VSM8: 1/2” swivel male FSR VSF8: 1/2” swivel female FSR TW8: 1/2" Butt weld ..... Please contact GENTEC for more information	K: PCTFE V: Vespel®	Blank: Standard (Normally closed)	S1: UHP Process Standard S2: Photovoltaic Process Standard
			P: Pneumatic actuator (Normally closed)	S: 150 psi	VM8: 1/2” male FSR VSM8: 1/2” swivel male FSR VSF8: 1/2” swivel female FSR TW8: 1/2" Butt weld ..... Please contact GENTEC for more information	K: PCTFE V: Vespel®	Blank: Standard (Normally closed) NO: Normally Open	S1: UHP Process Standard S2: Photovoltaic Process Standard

*: When the inlet and outlet connections are identical, only one code should be provided. If they differ, the first code corresponds to the inlet connection, while the second code is for the outlet connection.



SL-DV88MM-VM8-S1

Features

- Suitable for ultra-high purity applications
- 316L stainless steel enhances weldability and resistance to corrosion
- Face seal fittings (FSR) or butt weld connections, compression tube fittings
- Designed for very low particle generation
- Metal-to-metal diaphragm seals
- High-cycle life
- 100% Helium-leak tested

Materials

- Body: 316L
- Seat: PCTFE
- Diaphragm: Co-Ni Super Alloy

Specifications

- Flow Capacity: Cv=1.0
- Maximum Leak Rate
  Inboard: $1x10^{-9}$ atm cc/sec He
  Outboard: $4x10^{-9}$ atm cc/sec He
- Proof pressure: 150% of maximum rated pressure
- Burst pressure: 400% of maximum rated pressure

Operating Conditions

- Maximum Operating Pressure: 3500, 1500 psi
- Minimum Operating Pressure: vacuum
- Temperature: -40°F ~ 150°F (-40°C ~ 65°C)

Wetted Surface

- Wetted Surface: Ra 7 µin

Internal Volume

- Internal Volume: 20 cc

Dimensions

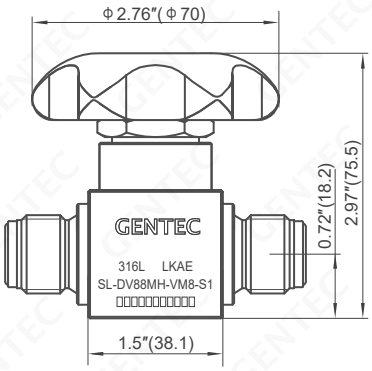

Handwheel (3500 psi)

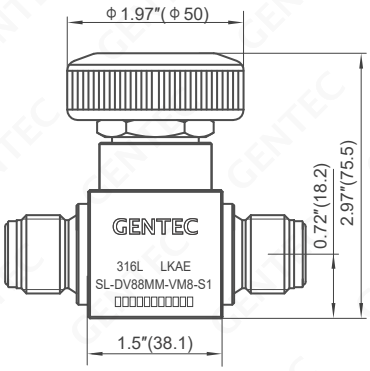

Handwheel (1500 psi)

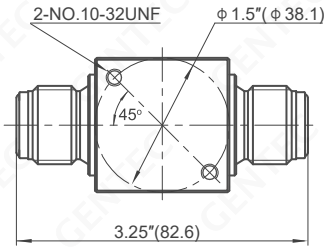

VM8

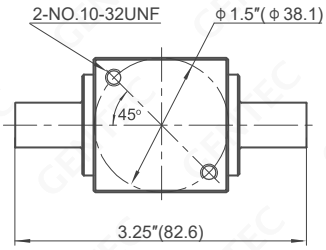

TW8

Dimension: in.(mm)

Ordering Information

EX:	SL	- DV88	M	H	- VM8	- S2
	Body Material	Valve Series	Actuation	Working Pressure	Inlet / Oulet Connection*	Process Standard
	SL: 316L	DV88	M: Manual	H: 3500 psi M: 1500 psi	VM8: 1/2” male FSR TW8: 1/2″ Tube weld ..... Please contact GENTEC for more information	S1: UHP Process Standard S2: Photovoltaic Process Standard

*: When the inlet and outlet connections are identical, only one code should be provided. If they differ, the first code corresponds to the inlet connection, while the second code is for the outlet connection.

DV89 SERIES

Ultra-high Purity Diaphragm Valves

Solutions for Life

DV89 series ultra-high purity diaphragm valves are designed for ultra-high purity gas systems in the semiconductor and photovoltaic industries.



SL-DV89MH-VM8-K-S1



SL-DV89PH-VM8-K-S2

Features

- 316L stainless steel body
- Pneumatic actuation
- 1/2” Face seal fittings (FSR) connections
- Internal spring-less design and metal-to-metal seal minimizes particle generation and ensures “purity integrity” in the flow passages
- 100% Helium-leak tested

Materials

- Body: 316L
- Seat: PCTFE
- Diaphragm: Co-Ni Super Alloy

Specifications

- Flow Capacity: Cv=0.5
- Maximum Leak Rate:
  Body Leak Rate: 1 x 10^{-9} atm cc/sec He
  Valve Seat Leak Rate: 4 x 10^{-9} atm cc/sec He
- Proof Pressure: 150% of maximum working pressure
- Burst Pressure: 400% of maximum working pressure

Operating Conditions

- Maximum Operating Pressure: 3000 psi
- Minimum Working Pressure: Vacuum
- Temperature: -40°C ~ 65°C (-40°F ~ 150°F)

Pneumatic Actuator Specifications

- Driving Pressure: 75 ~ 101.5 psi
- Inlet Connection: M5 (Female)
- Working Status: Normally Closed

Wetted Surface

- Wetted Surface: Ra 7 µin

Internal Volume

- Internal Volume: 4.89 cc

Dimensions

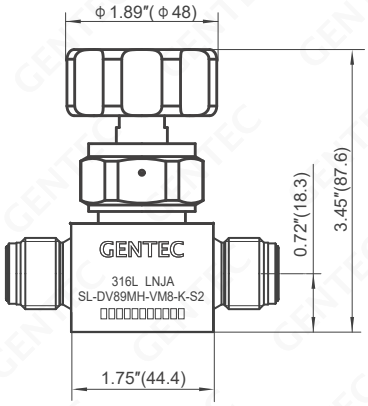

Handwheel

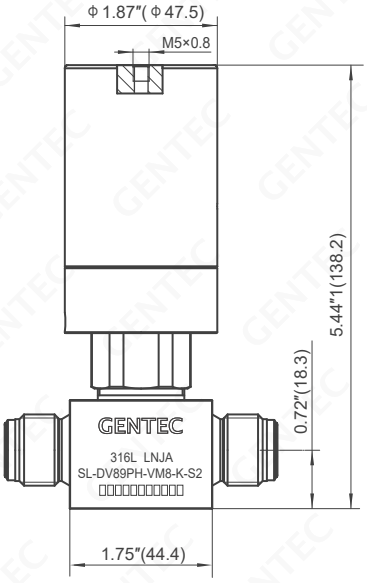

Pneumatic (Normally Closed)

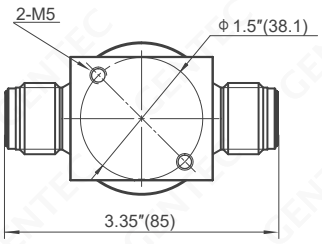

VM8

Dimension: in.(mm)

Ordering Information

EX:	SL	- DV89	P	H	- VM8	- K	- S1
	Body Material	Valve Series	Actuation	Working Pressure	Inlet / Oulet Connection*	Seat Material	Process Standard
	SL: 316L	DV89	M: Handwheel P: Pneumatic	H: 3000 psi	VM8: 1/2” male FSR ..... Please contact GENTEC for more information	K: PCTFE	S1: UHP Process Standard S2: Photovoltaic Process Standard

*: When the inlet and outlet connections are identical, only one code should be provided. If they differ, the first code corresponds to the inlet connection, while the second code is for the outlet connection.



SL-DV90B-VSF8-S1



SL-DV90-TW8-S1

Features

- Suitable for ultra-high purity applications
- 316L Stainless Steel enhances welding and corrosion resistance
- Face seal fitting (FSR), compression tube connections
- Design for very low particle generation
- Metal-to-metal diaphragm seals
- High-cycle life
- 100% Helium-leak tested

Materials

- Body: 316L
- Seat: PCTFE
- Diaphragm: Co-Ni Super Alloy

Specifications

- Flow Capacity: Cv=2.8
- Maximum Leak Rate:
  Body Leak Rate: 1 x 10^{-9} atm cc/sec He
  Valve Seat Leak Rate: 4 x 10^{-9} atm cc/sec He
- Proof Pressure: 150% of maximum working pressure
- Burst Pressure: 400% of maximum working pressure

Operating Conditions

- Maximum Operating Pressure: 300 psi
- Minimum Operating Pressure: vacuum
- Temperature: -40°F ~ 150°F (-40°C ~ 65°C)

Wetted Surface

- Wetted Surface: Ra 7 µin

Internal Volume

- Internal Volume: 19 cc

Dimensions

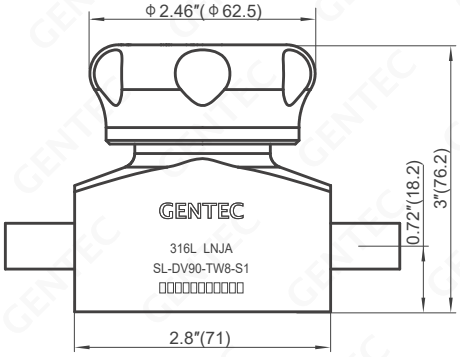

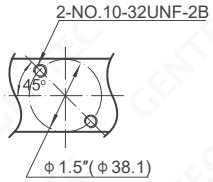

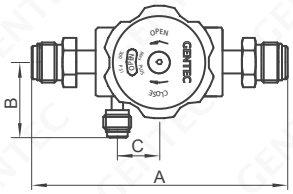

SL-DV90D-VSM8-E

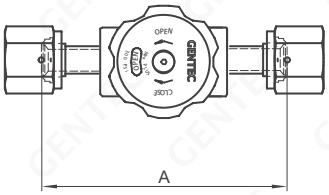

SL-DV90-VSM8-E

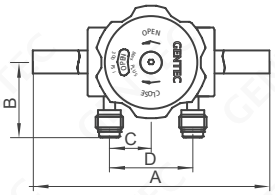

SL-DV90B-TW8-E

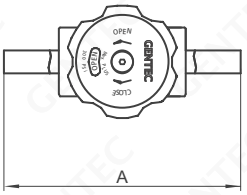

SL-DV90-TW8-E

Model Number	Inlet / Outlet Connections	Orifice	Cv	Dimensions			
				A	B	C	D
SL-DV90B-VSM8	1/2″ Face seal swivel male	0.50 (12.7)	2.8	5.61 (142.5)	1.67 (42.4)	0.92 (23.3)	1.83 (46.48)
SL-DV90-VSM8	1/2″ Face seal swivel male	0.50 (12.7)	2.8	5.61 (142.5)	/	/	/
SL-DV90B-VSF8	1/2″ Face seal swivel female	0.50 (12.7)	2.8	5.61 (142.5)	1.67 (42.4)	0.92 (23.3)	1.83 (46.48)
SL-DV90-VSF8	1/2″ Face seal swivel female	0.50 (12.7)	2.8	5.61 (142.5)	/	/	/
SL-DV90B-TW8	1/2″ Tube weld	0.50 (12.7)	2.8	8.78 (223.0)	1.67 (42.4)	0.92 (23.3)	1.83 (46.48)
SL-DV90-TW8	1/2″ Tube weld	0.50 (12.7)	2.8	8.78 (223.0)	/	/	/
SL-DV90B-TW12	3/4″ Tube weld	0.50 (12.7)	2.8	8.78 (223.0)	1.67 (42.4)	0.92 (23.3)	1.83 (46.48)
SL-DV90-TW12	3/4″ Tube weld	0.50 (12.7)	2.8	8.78 (223.0)	/	/	/

Dimension: in.(mm)

Ordering Information

EX:	SL	- DV90	B	VSM8	- S1
	Body Material	Valve Series	Purge Port(s)	Inlet / Oulet Connection*	Process Standard
	SL: 316L	DV90	(Purge ports, 1/4″ male FSR fitting) None: No purge ports B: with inlet and outlet purge ports U: with inlet purge ports D: with outlet purge ports	VSM8, VSF8, TW8, TW12 ..... Please contact GENTEC for more information	S1: UHP Process Standard S2: Photovoltaic Process Standard

*: When the inlet and outlet connections are identical, only one code should be provided. If they differ, the first code corresponds to the inlet connection, while the second code is for the outlet connection.

ALD16 SERIES

Ultra-high Purity Diaphragm Valves

Solutions for Life

ALD16 series high purity diaphragm valve is designed for atomic layer deposition processes in the semiconductor industry.



SLV-ALD16PS-VM4-S2



SLV-ALD16TPS-VM4-S2

Features

- Suitable for ultra-high purity applications
- High speed pneumatic actuator, response time <20ms
- Face seal fittings (FSR) or butt weld connections
- 100% Helium-leak tested

Materials

- Body: 316L VAR
- Seat: PFA
- Diaphragm: Co-Ni Super Alloy

Specifications

- Flow Capacity: Cv=0.27
- Leak Rate:

  Inboard Leakage: $1X10^{-9}$ atm.cc/sec He

  Across Seat Leakage: $1X10^{-9}$ atm.cc/sec He
- Proof Pressure: 150% of maximum working pressure
- Burst Pressure: 400% of maximum working pressure

Operating Conditions

- Maximum Operating Pressure: 300 psi
- Minimum Operating Pressure: vacuum
- Operating Temperature:

  ALD16: 32°F~248°F (0°C~120°C)

  ALD16T: 32°F~392°F (0°C~200°C)

Pneumatic Actuator Specifications

- Pneumatic Actuator

  Operating Pressure: 60 ~ 85 psi
- Working Temperature: ≤120°C
- Inlet Connection: 1/8″ NPT(F)
- Working Status: Normally Closed or Normally Open

Wetted Surface

- Wetted Surface: Ra 5 μin

Internal Volume

- Internal Volume: 1.6 cc

Dimensions

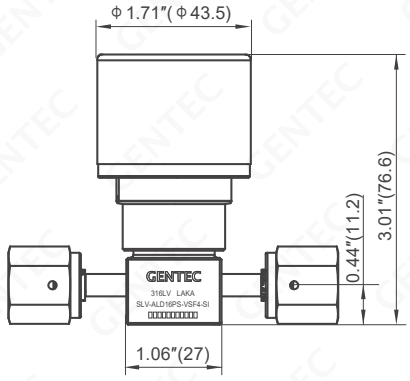

ALD16PS

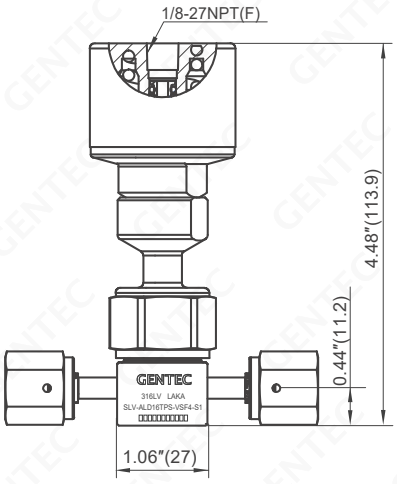

ALD16TPS

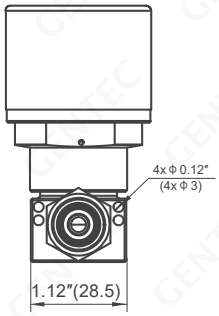

Side View

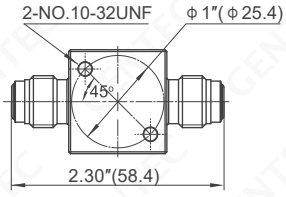

VM4

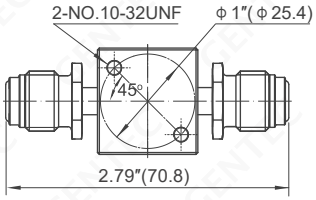

VSM4

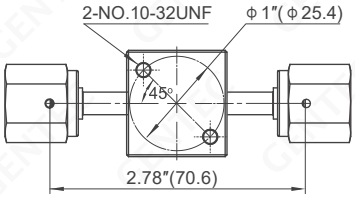

VSF4

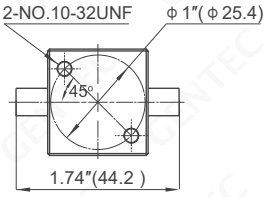

TW4

Dimension: in.(mm)

Ordering Information

EX: SLV	- ALD16	T	P	L	- VM4	- NO	- S1
Body Material	**Series Number**	**Temperature**	**Actuation**	**Working Pressure**	**Inlet / Outlet Connection***	**Actuator Specifications**	**Process Standard**
SLV: 316L VAR	ALD16	Blank: Up to 120°C T: Up to 200°C	P: Pneumatic	L: 300 psi S: 150 psi	VM4, VSM4, VSF4, TW4 ..... Please contact GENTEC for more information	Blank: Standard (Normally closed) NO: Normally open	S1: UHP Process Standard S2: Photovoltaic Process Standard

*: When the inlet and outlet connections are identical, only one code should be provided. If they differ, the first code corresponds to the inlet connection, while the second code is for the outlet connection.
IS: Electrical Indicator Switch for high pressure pneumatic actuator.

ALD26 series high purity diaphragm valve is designed for atomic layer deposition processes in the semiconductor industry.



SLV-ALD26PS-VM4-IH-S2



SLV-ALD26PS-VM4-IS-IV-S2



SLV-ALD26TPS-VM4-IH-S2

Features

- Suitable for ultra-high purity applications
- High speed pneumatic actuator, response time ≤5ms
- The flow control device ensures accurate and consistent Cv between valves
- Face seal fittings (FSR) or butt weld connections
- 100% Helium-leak tested

Materials

- Body: 316L VAR, 316L VIM VAR
- Seat: PFA
- Diaphragm: Co-Ni Super Alloy

Specifications

- Flow Capacity: Cv=0.27
- Leak Rate:
  Inboard Leakage: $1X10^{-9}$ atm.cc/sec He
  Across Seat Leakage: $1X10^{-9}$ atm.cc/sec He
- Proof Pressure: 150% of maximum working pressure
- Burst Pressure: 400% of maximum working pressure

Operating Conditions

- Maximum Operating Pressure: 150 psi
- Minimum Operating Pressure: vacuum
- Operating Temperature:
  ALD26: 32°F~248°F (0°C~120°C)
  ALD26T: 32°F~392°F (0°C~200°C)

Pneumatic Actuator Specifications

- Pneumatic Actuator
  Operating Pressure: 50 ~ 90 psi (Normally Closed)
  Operating Pressure: 70 ~ 90 psi (Normally Open)
- Working Temperature: ≤120°C
- Inlet Connection: M5 x 0.8(F)
- Working Status: Normally Closed or Normally Open

Wetted Surface

- Wetted Surface: Ra 5 µin

Internal Volume

- Internal Volume: 1.6 cc

Dimensions

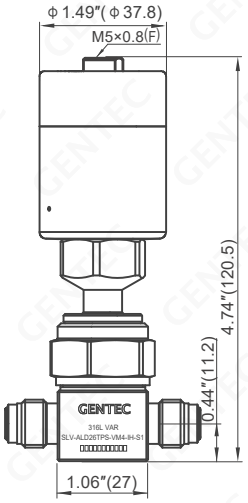

ALD26TPS

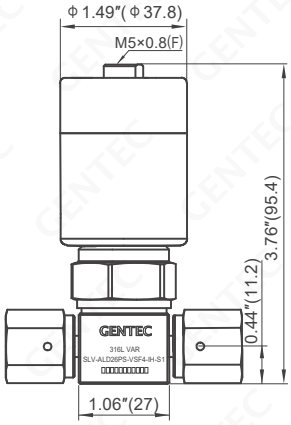

ALD26PS

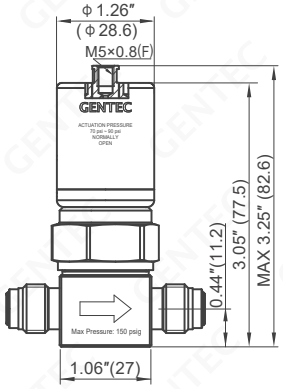

Normally Open

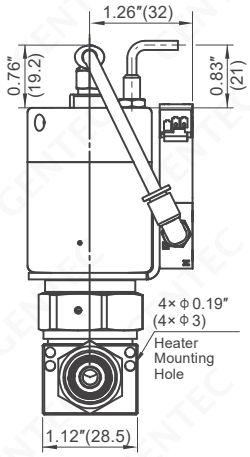

with Heater Mounting Hole
(standard, normally closed)

Electronic Actuator-Position Sensors Wiring Diagram

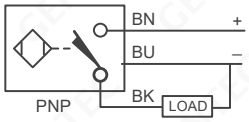

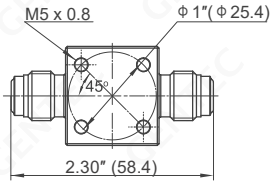

VM4

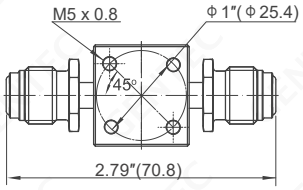

VSM4

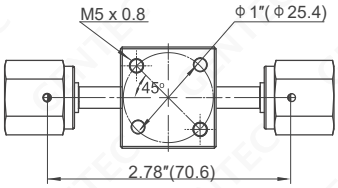

VSF4

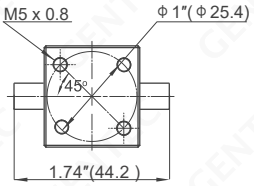

TW4

Dimension: in.(mm)

Solenoid Pilot Valve Technical Information	
Component	MAC Valve 34C-ABA
Solenoid Pilot Valve	24 V, 4 W
	Temperature: -18°C ~ 50°C (-0.4°F ~ 122°F)
	Porting: M5 × 0.8-6H thread, compatible with 10-32 screws
Tubing	Material: polyurethane
Bracket	Material: 316 stainless steel

Sensor Technical Information	
Output	3-wire V (dc)—transistor (current-sourcing)
Output Function	Normally open
Voltage	10 to 30 V (dc) polarity protected—pulsed SCP
Operating Temperature	-10°F ~ 158°F (-23°C ~ 70°C)

Ordering Information

EX: SLV	- ALD26	T	P	S	- VM4	- NO	- IS	- S1
Body Material	**Series Number**	**Temperature**	**Actuation**	**Working Pressure***	**Inlet / Outlet Connection****	**Actuator Specifications**	**Options**	**Process Standard**
SLV: 316L VAR SLVV: 316L VIM VAR	ALD26	Blank: Up to 120°C T: Up to 200°C	P: Pneumatic	S: 150 psi	VM4, VSM4, VSF4, TW4 ..... Please contact GENTECfor more information	Blank: Standard (Normally closed) NO: Normally open (without proximity switch indicator sensor)	IS: with proximity switch indicator sensor IV: with solenoid valve IH: with heater mounting hole	S1: UHP Process Standard S2: Photovoltaic Process Standard

*: Recommended working pressure of less than 35 psi (2.4 bar) maximizes cycle life.
**: When the inlet and outlet connections are identical, only one code should be provided. If they differ, the first code corresponds to the inlet connection, while the second code is for the outlet connection.

ALD27 SERIES

Ultra-high Purity Diaphragm Valves

Solutions for Life

ALD27 series high purity diaphragm valve is designed for atomic layer deposition processes in the semiconductor industry.



SLVV-ALD27PS-VSF8-IH-S2



SLVV-ALD27PS-VSF8-IV-IS-S2



SLVV-ALD27TPS-VSF8-IH-S2

Features

- Suitable for ultra-high purity applications
- High speed pneumatic actuator, response time ≤5ms
- The flow control device ensures accurate and consistent Cv between valves
- Face seal fittings (FSR) or butt weld connections
- 100% Helium-leak tested

Materials

- Body: 316L VAR, 316L VIM VAR
- Seat: PFA
- Diaphragm: Co-Ni Super Alloy

Specifications

- Flow Capacity: Cv=0.62
- Leak Rate:
  Inboard Leakage: $1X10^{-9}$ atm.cc/sec He
  Across Seat Leakage: $1X10^{-9}$ atm.cc/sec He
- Proof Pressure: 150% of maximum working pressure
- Burst Pressure: 400% of maximum working pressure

Operating Conditions

- Maximum Operating Pressure: 150 psi
- Minimum Operating Pressure: vacuum
- Operating Temperature:
  ALD27: 32°F~248°F (0°C~120°C)
  ALD27T: 32°F~392°F (0°C~200°C)

Pneumatic Actuator Specifications

- Pneumatic Actuator
  Operating Pressure: 50 ~ 90 psi
- Working Temperature: ≤120°C
- Inlet Connection: M5 x 0.8(F)
- Working Status: Normally Closed

Wetted Surface

- Wetted Surface: Ra 5 μin

Internal Volume

- Internal Volume: 4.3 cc

Dimensions

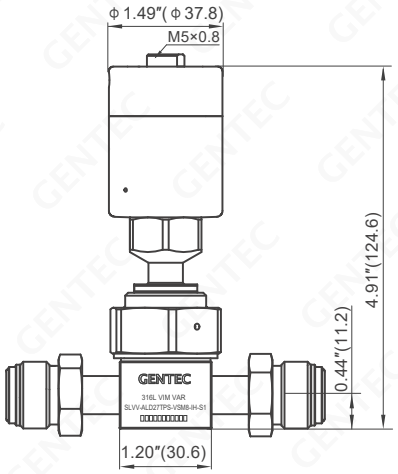

ALD27TPS

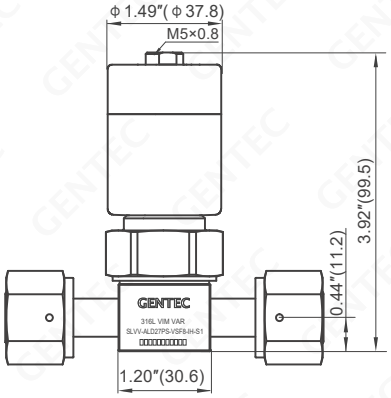

ALD27PS

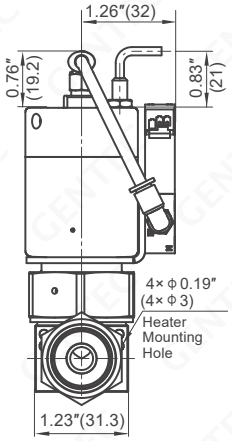

with Heater Mounting Hole
(standard, normally closed)

Electronic Actuator-Position Sensors Wiring Diagram

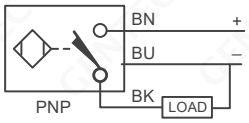

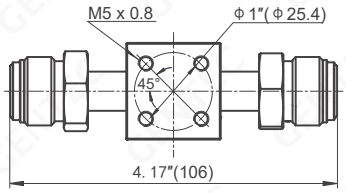

VSM8

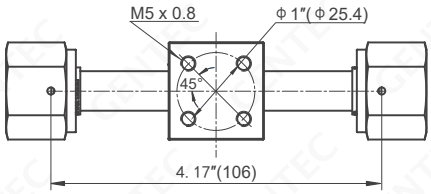

VSF8

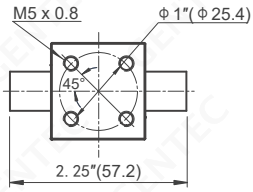

TW8

Dimension: in.(mm)

Solenoid Pilot Valve Technical Information	
Component	MAC Valve 34C-ABA
Solenoid Pilot Valve	24 V, 4 W
	Temperature: -18°C ~ 50°C (-0.4°F ~ 122°F)
	Porting: M5 × 0.8-6H thread, compatible with 10-32 screws
Tubing	Material: polyurethane
Bracket	Material: 316 stainless steel

Sensor Technical Information	
Output	3-wire V (dc)—transistor (current-sourcing)
Output Function	Normally open
Voltage	10 to 30 V (dc) polarity protected—pulsed SCP
Operating Temperature	-10°F ~ 158°F (-23°C ~ 70°C)

Ordering Information

EX:	SLV	- ALD27	T	P	S	- VSF8	- IS	- S1
	Body Material	**Series Number**	**Temperature**	**Actuation**	**Working Pressure***	**Inlet / Outlet Connection****	**Options**	**Process Standard**
	SLV: 316L VAR SLVV: 316L VIM VAR	ALD27	Blank: Up to 120°C T: Up to 200°C	P: Pneumatic	S: 150 psi	VSM8, VSF8, TW8 ..... Please contact GENTEC for more information	IS: with proximity switch indicator sensor IV: with solenoid valve IH: with heater mounting hole	S1: UHP Process Standard S2: Photovoltaic Process Standard

*: Recommended working pressure of less than 35 psi (2.4 bar) maximizes cycle life.
**: When the inlet and outlet connections are identical, only one code should be provided. If they differ, the first code corresponds to the inlet connection, while the second code is for the outlet connection.

ALD37 SERIES

Ultra-high Purity Diaphragm Valves

Solutions for Life

ALD37 series high purity diaphragm valve is designed for atomic layer deposition processes in the semiconductor industry.



SLVV-ALD37PS-VSF8-IH-S1



SLVV-ALD37PS-VSF8-IV-IS-S1

Features

- Suitable for ultra-high purity applications
- High speed pneumatic actuator, response time ≤5ms
- The flow control device ensures accurate and consistent Cv between valves
- Face seal fittings (FSR) or butt weld connections
- 100% Helium-leak tested

Materials

- Body: 316L VAR, 316L VIM VAR
- Seat: PFA
- Diaphragm: Co-Ni Super Alloy

Specifications

- Flow Capacity: Cv=0.7
- Leak Rate:
  Inboard Leakage: $1X10^{-9}$ atm.cc/sec He
  Across Seat Leakage: $1X10^{-9}$ atm.cc/sec He
- Proof Pressure: 150% of maximum working pressure
- Burst Pressure: 400% of maximum working pressure

Operating Conditions

- Maximum Operating Pressure: 150 psi
- Minimum Operating Pressure: vacuum
- Operating Temperature: 32°F~392°F (0°C~200°C)

Pneumatic Actuator Specifications

- Pneumatic Actuator
  Operating Pressure: 60 ~ 120 psi
- Working Temperature: ≤150°C
- Inlet Connection: M5 x 0.8(F)
- Working Status: Normally Closed

Wetted Surface

- Wetted Surface: Ra 5 µin

Internal Volume

- Internal Volume: 4.3 cc

Dimensions

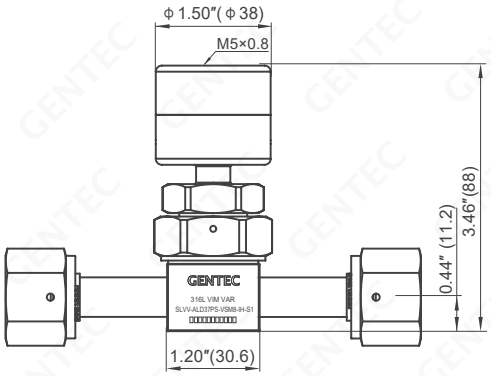

ALD37PS

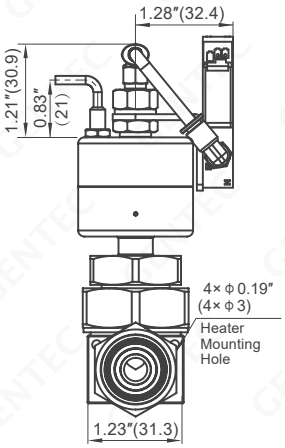

with Heater Mounting Hole
(standard, normally closed)

Electronic Actuator-Position Sensors
Wiring Diagram

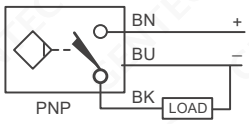

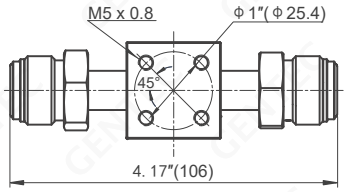

VSM8

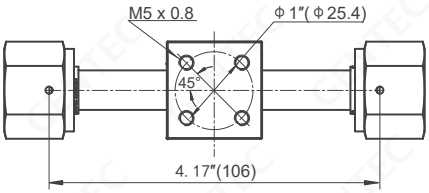

VSF8

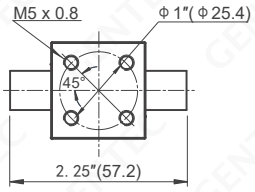

TW8

Dimension: in.(mm)

Solenoid Pilot Valve Technical Information	
Component	MAC Valve 34C-ABA
Solenoid Pilot Valve	24 V, 4 W
	Temperature: -18°C ~ 50°C (-0.4°F ~ 122°F)
	Porting: M5 × 0.8-6H thread, compatible with 10-32 screws
Tubing	Material: polyurethane
Bracket	Material: 316 stainless steel

Sensor Technical Information	
Output	3-wire V (dc)—transistor (current-sourcing)
Output Function	Normally open
Voltage	10 to 30 V (dc) polarity protected—pulsed SCP
Operating Temperature	-10°F ~ 158°F (-23°C ~ 70°C)

Ordering Information

EX: SLV	- ALD37	P	S	- VM8	- IS	- S1
Body Material	**Series Number**	**Actuation**	**Working Pressure***	**Inlet / Outlet Connection****	**Options**	**Process Standard**
SLV: 316L VAR SLVV: 316L VIM VAR	ALD37	P: Pneumatic	S: 150 psi	VSM8, VSF8, TW8 ..... Please contact GENTEC for more information	IS: with proximity switch indicator sensor IV: with solenoid valve IH: with heater mounting hole	S1: UHP Process Standard S2: Photovoltaic Process Standard

*: Recommended working pressure of less than 35 psi (2.4 bar) maximizes cycle life.
**: When the inlet and outlet connections are identical, only one code should be provided. If they differ, the first code corresponds to the inlet connection, while the second code is for the outlet connection.

BDV1 SERIES

Ultra-high Purity Bleed Diaphragm Valves

Solutions for Life

BDV1 series Ultra-high Purity Bleed Diaphragm Valves are designed for ultra-high purity applications such as gas cylinder cabinets, gas cylinder holders and VMBs.



SL-BDV1ML-VM4-S1



SL-BDV1PL-VM4-S2

Features

- 316L stainless steel body
- Both manual and pneumatic actuation are available
- Face seal fittings (FSR) or butt weld connections
- 100% Helium-leak tested

Materials

- Body: 316L
- Seat: 316L
- Diaphragm: Co-Ni Super Alloy

Specifications

- Flow Capacity: Cv=0.27
- Body Leak Rate: 1 x 10^{-9} atm cc/sec He
- Proof Pressure: 150% of maximum working pressure
- Burst Pressure: 400% of maximum working pressure

Operating Conditions

- Maximum Operating Pressure: 300 psi
- Minimum Operating Pressure: vacuum
- Temperature: -40°F ~ 150°F (-40°C ~ 65°C)

Pneumatic Actuator Specifications

- Driving Pressure: 60 ~ 85 psi
- Inlet Connection: 1/8″ NPT (Female)
- Working Status: Normally Closed or Normally Open

Wetted Surface

- Wetted Surface: Ra 7 μin

Internal Volume

- Internal Volume: 1.6 cc

Dimensions

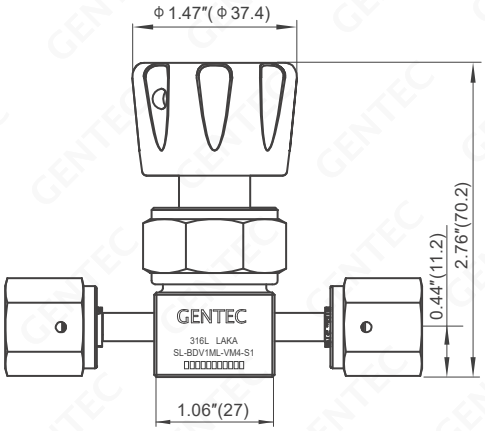

Handwheel

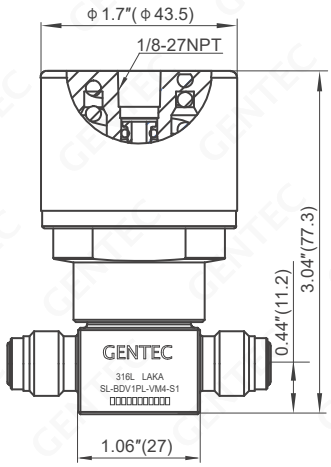

Pneumatic

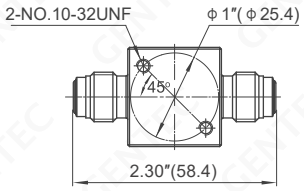

VM4

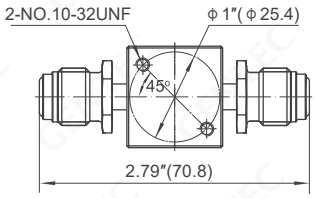

VSM4

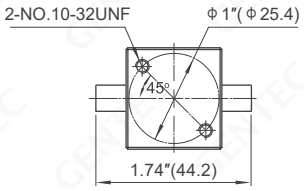

TW4

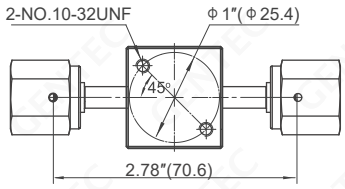

VSF4

Dimension: in.(mm)

Ordering Information

EX:	SL	- BDV1	P	L	- VM4	- IS	- B	- S1
	Body Material	Series Number	Actuation	Working Pressure	Inlet / Outlet Connection*	Actuator Specifications	Bleed Orifice	Process Standard
	SL: 316L	BDV1	M: Handwheel (with display), 90° switch P: Pneumatic actuator	L: 300 psi	VM4, VSM4, VSF4, TW4 ..... Please contact GENTEC for more information	Blank: Standard (Normally closed) NO: Normally open	Blank: Φ 0.36 mm B: Φ 0.52 mm	S1: UHP Process Standard S2: Photovoltaic Process Standard

*: When the inlet and outlet connections are identical, only one code should be provided. If they differ, the first code corresponds to the inlet connection, while the second code is for the outlet connection.

V400 SERIES

Ultra-high Purity Cylinder Valves

Solutions for Life

V400 series cylinder valve is developed for the semiconductor industry. It is designed for use with ultra-high purity gas cylinders to prevent gas leakage and achieve the low leakage rates demanded by ultra-high purity gas users.



SL-V401-N4-D632-K



SL-V402-N4-D632-K

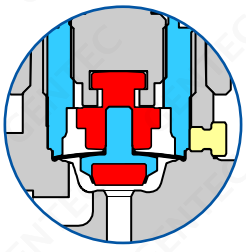

Tied-diaphragm Design
with replacable valve seat

Features

- Suitable for most specialy gases including variants for oxygen and highly corrosive gases such as chlorine and hydrogen chloride
- Manual and pneumatic versions are available based on a common body design
- Final assembly and testing are carried out under Class 100 (ISO 5) cleanroom conditions
- 100% high-pressure helium leak test
- Tied-diaphragm design with replacable valve seat
- Various inlet and outlet gas connection standards are available (CGA, JIS, ISO etc.)
- For transportation the actuator can be locked to prevent shock-induced leakage
- The outlet port is sealed and protected by a cap retained by a chain
- Internally springless design
- The valve mechanism incorporates secondary sealing for enhanced safety

Materials

- Body: 316L, 316L VAR
- Seat: PCTFE, Vespel®(Optional)
- Diaphragm: Co-Ni Super Alloy

Specifications

- Flow Capacity: Cv=0.3
- Working Pressure: 3000 psi
- Nominal Bore: 4 mm
- Outboard (gland) Leak Rate: ≤1x10^{-9} mbar l/s (249 bar He)
  Inlet/Outlet (seat) Leak Rate: ≤1x10^{-8} mbar l/s (249 bar He)
- Temperature: -40°C ~ 60°C (-40°F ~ 140°F)

Pneumatic Control Specification

- A normally-closed actuator is available for all valves
  The valve is opened by applying pressure and is closed by spring return
- Pilot Pressure: 73 ~ 116 psi
- Actuating Medium: Air or Nitrogen
- Pilot Port: G 1/8
- Materials of Construction: stainless steel, nickel aluminium bronze and hard anodized aluminium alloy

Ordering Information

Ex:	SL	- V400	- N4	- D632	- K	- R04	T
	Valve Material	Series Number	Inlet Connection*	Outlet Connection*	Seat Material	Pressure Relief Device (Optional)	Restrictor (Optional)
	SL: 316L SLV: 316L VAR	V401: Manual V402: Pneumatic	P2: GB PZ27.8 N4: 3/4 NGT T2: 1/2 NPT B1: BSP, 1"-14 E2: EN 629-1 25E D2: DIN 477 W28.8 X 1/14 J2: JIS B8246 V2	D632: CGA632 (DISS) D634: CGA634 (DISS) D714: CGA714 (DISS) D718: CGA718 (DISS) J22R: J22R C350: CGA350 C660: CGA660 BS03: BS 341#03 DN01: DIN 477#01	K: PCTFE V: Vespel®	Blank: None RXX: Pressure Relief Device (Refer to table1)*	Blank: None T: With flow restictor mounting hole **

* Various inlet and outlet gas connection standards are available, please contact Gentec for details.
** If an additional flow restrictor is required, please refer to Table 2 for ordering information.

Optional Accessories

Tabel 1: Safety Plug Allocation Table

Code	Material	Description	Solution Temperature °F (°C)	Working Pressure psi (bar)	Burst pressure psi (bar)
R1	Ni	Rupture disc type	/	2015 (139)	3360 (232)
R2	Ni	Rupture disc type	/	2265 (156)	3775 (260)
R3	Multicomponent alloy+Ni	Solution+rupture disc type	165 (74)	2015 (139)	3360 (232)
R4	Multicomponent alloy+Ni	Solution+rupture disc type	165 (74)	2265 (156)	3775 (260)
R5	Multicomponent alloy+Ni	Solution+rupture disc type	212 (100)	2015 (139)	3360 (232)
R6	Multicomponent alloy+Ni	Solution+rupture disc type	212 (100)	2265 (156)	3775 (260)
R7	Ni	Rupture disc type	/	1380 (95)	2300 (159)
R10	SS	Rupture disc type	/	2015 (139)	3360 (232)
R11	Multicomponent alloy+SS	Solution+rupture disc type	165 (74)	2015 (139)	3360 (232)
R12	Multicomponent alloy+SS	Solution+rupture disc type	165 (74)	2400 (165)	4000 (276)
R13	Multicomponent alloy+SS	Solution+rupture disc type	212 (100)	2265 (156)	3775 (260)
R22	Multicomponent alloy	Soluble washer	212 (100)	500 (35)	/
R23	Multicomponent alloy	Fusible plug	165 (74)	500 (35)	/

Table 2: Flow Restrictor Ordering Information

Code	Orifice	Model No
T1	0.3	ND53184/4
T2	0.5	ND53184/6
T3	1	ND53184/7
T4	1.75	ND53184/1
T5	2.5	ND53184/2
T6	3	ND53184/3



Flow Restrictor

V800 series cylinder valve is developed for the semiconductor industry. It is designed for use with ultra-high purity gas cylinders to prevent gas leakage and achieve the low leakage rates demanded by ultra-high purity gas users.



SL-V800-N4-D632-K



SL-V801-N4-D632-K

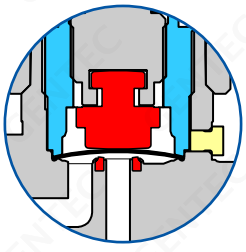

Internal Constuction

Features

- Suitable for most special gases including variants for oxygen and highly corrosive gases such as chlorine and hydrogen chloride
- Manual and pneumatic versions are available based on a common body design
- Final assembly and testing are carried out under Class 100 (ISO 5) cleanroom conditions
- 100% high-pressure helium leak test
- Low internal dead volume minimizes purge time
- To prevent the shedding of particulate contamination, there are nosliding, rotating, or rubbing components in the flow path
- Various inlet and outlet gas connection standards are available (CGA, JIS, ISO etc.)
- For transportation the actuator can be locked to prevent shock-induced leakage
- The outlet port is sealed and protected by a cap retained by a chain
- Internally springless design
- The valve mechanism incorporates secondary sealing for enhanced safety

Materials

- Body: 316L, 316L VAR
- Seat: PCTFE, Vespel®(Optional)
- Diaphragm: Co-Ni Super Alloy

Specifications

- Flow Capacity: Cv=0.26
- Working Pressure: 3335 psi
- Nominal Bore: 4 mm
- Outboard (gland) Leak Rate: ≤1x10^{-9} mbar l/s (276 bar He)
  Inlet/Outlet (seat) Leak Rate: ≤1x10^{-8} mbar l/s (276 bar He)
- Temperature: -40°C ~ 60°C (-40°F ~ 140°F)

Pneumatic Control Specification

- A normally-closed actuator is available for all valves
  The valve is opened by applying pressure and is closed by spring return
- Pilot Pressure: 73 ~ 116 psi
- Actuating Medium: Air or Nitrogen
- Pilot Port: G1/8
- Materials of Construction: stainless steel, nickel aluminium bronze and hard anodized aluminium alloy

Ordering Information

Ex:	SL	- V800	- N4	- D632	- K	- R04	T
	Valve Material	Series Number	Inlet Connection*	Outlet Connection*	Seat Material	Pressure Relief Device (Optional)	Restrictor (Optional)
	SL: 316L SLV: 316L VAR	V800: Manual V801: Pneumatic	P2: GB PZ27.8 N4: 3/4 NGT T2: 1/2 NPT B1: BSP, 1"-14 E2: EN 629-1 25E D2: DIN 477 W28.8 X 1/14 J2: JIS B8246 V2	D632: CGA632 (DISS) D634: CGA634 (DISS) D714: CGA714 (DISS) D718: CGA718 (DISS) J22R: J22R C350: CGA350 C660: CGA660 BS03: BS 341#03 DN01: DIN 477#01	K: PCTFE V: Vespel®	Blank: None RXX: Pressure Relief Device (Refer to table1)*	Blank: None T: With flow restictor mounting hole **

* Various inlet and outlet gas connection standards are available, please contact Gentec for details.
** If an additional flow restrictor is required, please refer to Table 2 for ordering information.

Optional Accessories

Tabel 1: Safety Plug Allocation Table

Code	Material	Description	Solution Temperature °F (°C)	Working Pressure psi (bar)	Burst pressure psi (bar)
R1	Ni	Rupture disc type	/	2015 (139)	3360 (232)
R2	Ni	Rupture disc type	/	2265 (156)	3775 (260)
R3	Multicomponent alloy+Ni	Solution+rupture disc type	165 (74)	2015 (139)	3360 (232)
R4	Multicomponent alloy+Ni	Solution+rupture disc type	165 (74)	2265 (156)	3775 (260)
R5	Multicomponent alloy+Ni	Solution+rupture disc type	212 (100)	2015 (139)	3360 (232)
R6	Multicomponent alloy+Ni	Solution+rupture disc type	212 (100)	2265 (156)	3775 (260)
R7	Ni	Rupture disc type	/	1380 (95)	2300 (159)
R10	SS	Rupture disc type	/	2015 (139)	3360 (232)
R11	Multicomponent alloy+SS	Solution+rupture disc type	165 (74)	2015 (139)	3360 (232)
R12	Multicomponent alloy+SS	Solution+rupture disc type	165 (74)	2400 (165)	4000 (276)
R13	Multicomponent alloy+SS	Solution+rupture disc type	212 (100)	2265 (156)	3775 (260)
R22	Multicomponent alloy	Soluble washer	212 (100)	500 (35)	/
R23	Multicomponent alloy	Fusible plug	165 (74)	500 (35)	/

Table 2: Flow Restrictor Ordering Information

Code	Orifice	Model No
T1	0.3	ND53184/4
T2	0.5	ND53184/6
T3	1	ND53184/7
T4	1.75	ND53184/1
T5	2.5	ND53184/2
T6	3	ND53184/3



Flow Restrictor



SL-CV52-VM4-Y-S2

Features

- Maximum Operating Pressure: 3000 psi
- Connections: VM4, VM8
- Size: 1/4″, 1/2″

Materials

- Body: 316L
- Poppet: 316L+ Fluororubber, 316L+ EPDM
- Spring: 316L
- O-ring: 316L

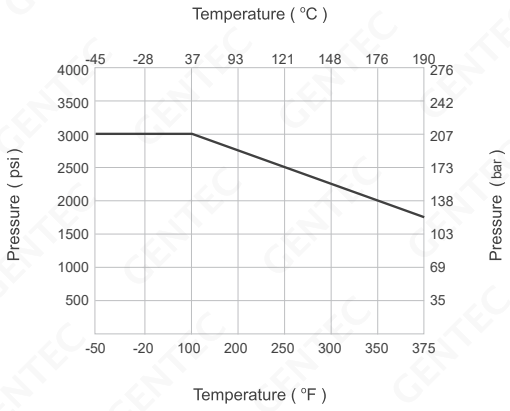

Seal Materials

- Fluororubber O-rings are standard,

  other materials are listed in table below:

Seal Materials	Reference Number	Temperature Rate °F (°C)
Fluororubber	-R	-10~370 (-23 ~ 190)
EPDM	-Y	-50~300 (-45 ~ 148)

Cracking and Reseal Pressures

Nominal Cracking Pressure psi (bar)	Cracking Pressure Ranges psi (bar)	Minimum Reseating Pressure psi (bar)
1 (0.07)	< 2 (0.14)	6 (0.41)

*Cracking and Reseating Pressure at 70°F (21°C), Air

Dimensions

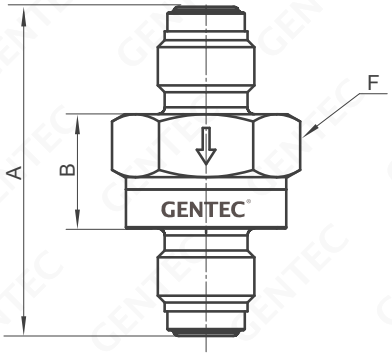

VM4

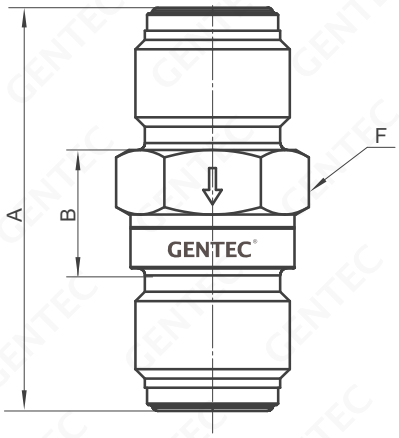

VM8

Model Number	Orifice	Cv	Inlet / Outlet Connection	Dimensions		
				A	B	F
SL-CV52-VM4	0.18″ (4.6)	0.55	1/4″ FSR	1.89″ (48.1)	0.66″ (16.7)	15/16
SL-CV52-VM8	0.40″ (10.2)	0.70	1/2″ FSR	2.26″ (57.5)	0.67″ (16.9)	15/16

Dimension: in.(mm)

Ordering Information

Ex:	SL	- CV52	- VM4	- R	- S1
	Valve Material	Series Number	Inlet / Outlet Connection*	Seal Material	Process Standard
	SL: 316L	CV52	VM4: 1/4″ Face seal male (FSR fittings) VM8: 1/2″ Face seal male (FSR fittings) ..... Please contact GENTEC for more information	R: Fluororubber Y: Ethylene Propylene (EPDM)	S1: UHP Process Standard S2: Photovoltaic Process Standard

*: When the inlet and outlet connections are identical, only one code should be provided. If they differ, the first code corresponds to the inlet connection, while the second code is for the outlet connection.



SL-CV53-VM4-Y-S1

Features

- Maximum Operating Pressure: 3000 psi
- Connections: VM, VSM, VSF, TW
- Size: 1/4″, 3/8″, 1/2″
- Valve Seat Leak Rate:

  Fluororubber and EPDM: ≤1 x 10^{-9} mbar l/s (He)

  Perfluoroelastomer: ≤5 x 10^{-7} mbar l/s (He)
- Body Leak Rate: ≤1 x 10^{-12} mbar l/s (He)
- Channel EP processing

Materials

- Body: 316L
- Poppet: 316L+ Fluororubber, 316L+ EPDM,

  Perfluoroelastomer
- O-ring: 316L
- Leaf Spring: C-22

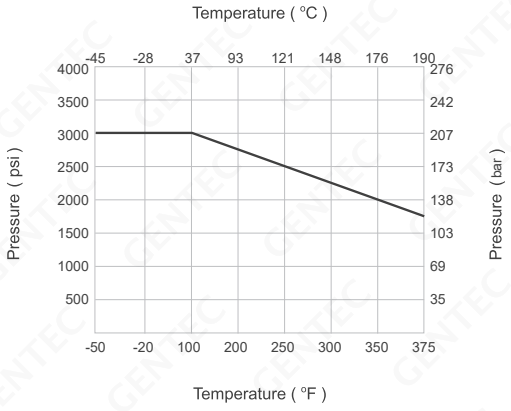

Seal Materials

- Fluororubber O-rings are standard,

  other materials are listed in table below:

Seal Materials	Reference Number	Temperature Rate °F (°C)
Fluororubber	- R	-10~370 (-23 ~ 190)
EPDM	- Y	-50~300 (-45 ~ 148)
Perfluoroelastomer	- Q	-50~300 (-45 ~ 148)

Cracking and Reseal Pressures

Nominal Cracking Pressure psi (bar)	Cracking Pressure Ranges psi (bar)	Minimum Reseating Pressure psi (bar)
1 (0.07)	< 2 (0.14)	5 (0.35)

*Cracking and Reseating Pressure at 70°F (21°C), Nitrogen

Dimensions

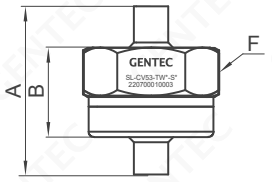

TW

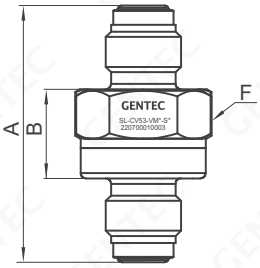

VM

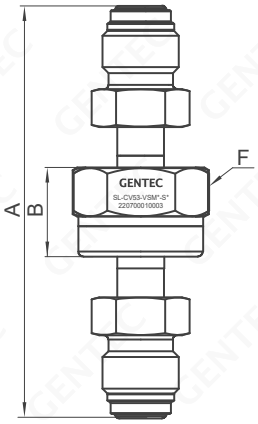

VSM

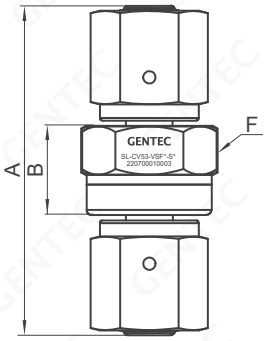

VSF

Model Number	Orifice	Cv	Inlet / Outlet Connection	Dimensions		
				A	B	F (Hex Flat)
SL-CV53-VM4	0.18″ (4.60)	0.55	1/4″ FSR	1.80″ (45.80)	0.57″ (14.4)	15/16
SL-CV53-VM8	0.40″ (10.2)	0.70	1/2″ FSR	2.06″ (52.30)	0.54″ (13.7)	15/16
SL-CV53-TW4	0.18″ (4.57)	0.55	1/4″ TW	1.24″ (31.50)	0.57″ (14.4)	15/16
SL-CV53-TW6	0.30″ (7.62)	0.55	3/8″ TW	1.24″ (31.50)	0.57″ (14.4)	15/16
SL-CV53-TW8	0.40″ (10.2)	0.70	1/2″ TW	1.24″ (31.50)	0.57″ (14.4)	15/16
SL-CV53-VSM4	0.18″ (4.60)	0.55	1/4″ VSM	3.04″ (77.30)	0.57″ (14.4)	15/16
SL-CV53-VSM8	0.40″ (10.2)	0.70	1/2″ VSM	3.76″ (95.50)	0.57″ (14.4)	15/16
SL-CV53-VSF4	0.18″ (4.60)	0.55	1/4″ VSF	2.43″ (61.72)	0.57″ (14.4)	15/16
SL-CV53-VSF8	0.40″ (10.2)	0.70	1/2″ VSF	2.43″ (61.72)	0.57″ (14.4)	15/16

Dimension: in.(mm)

Ordering Information

Ex:	SL	- CV53	- VM4	- R	- S1
	Valve Material	Series Number	Inlet / Outlet Connection*	Seal Material	Process Standard
	SL: 316L	CV53	VM4: 1/4″ Face seal male (FSR fittings) VM8: 1/2″ Face seal male (FSR fittings) VSM4: 1/4" Face seal swivel male (FSR fittings) VSF8: 1/2" Face seal swivel female (FSR fittings) TW4: 1/4″ weld stub TW6: 3/8″ weld stub ..... Please contact GENTEC for more information	R: Fluororubber Y: EPDM Q: Perfluoroelastomer	S1: UHP Process Standard S2: Photovoltaic Process Standard

*: When the inlet and outlet connections are identical, only one code should be provided. If they differ, the first code corresponds to the inlet connection, while the second code is for the outlet connection.

MV3 series diaphragm metering valves are specifically designed for use in high purity gas applications within semiconductor manufacturing equipment.



SL-MV30M-VSF4-S2

Features

- Materials 316L or 316L VAR stainless steel
- Scaled knob switch
- FSR connection
- 100% Helium-leak tested

Materials

- Body: 316L, 316L VAR
- Diaphragm: Co-Ni Super Alloy

Specifications

- Flow Capacity:
  Cv=0.25 (MV30 Series), Cv=0.03 (MV31 Series)
- Maximum Leak Rate
  Inboard Leakage: $2x10^{-9}$ atm cc/sec He
- Proof Pressure: 150% of maximum rated pressure
- Burst Pressure: 400% of maximum rated pressure

Operating Conditions

- Maximum Operating Pressure: 150 psi
- Temperature: -14°F ~ 176°F (-10°C ~ 80°C)

Wetted Surface

- Wetted Surface: Ra 7 μin

Internal Volume

- Internal Volume: 1.6 cc

Dimensions

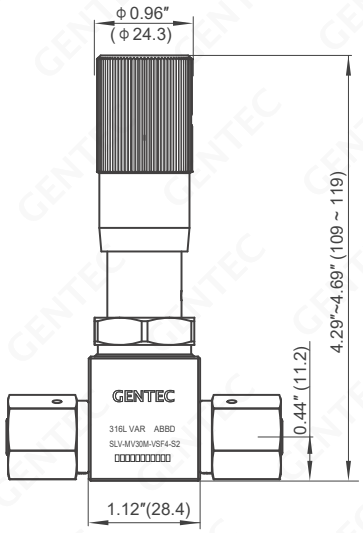

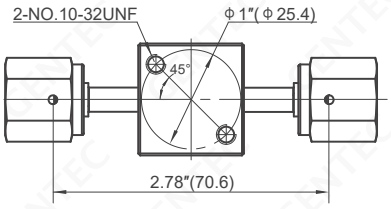

VSF4

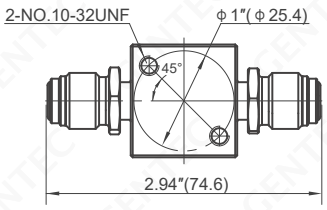

VSM4

Dimension: in.(mm)

Flow Data

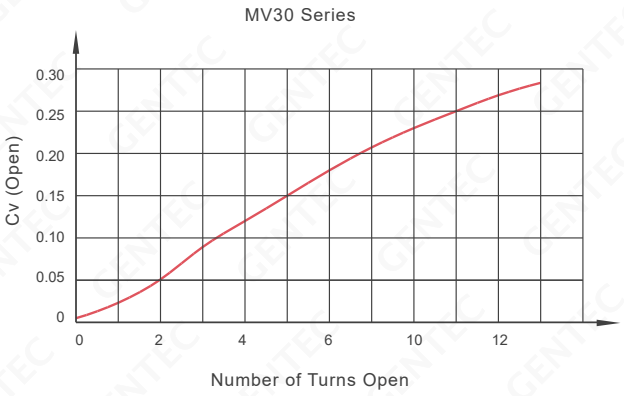

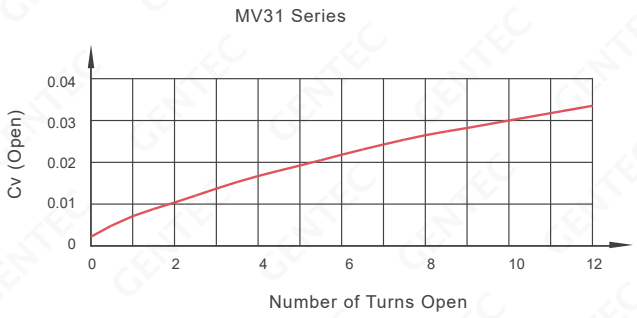

Ordering Information

EX:	SL	- MV30	M	- VSM4	- S2
	Body Material	Valve Series	Knob Type	Inlet / Outlet Connection*	Process Standard
	SL: 316L SLV: 316L VAR	MV30 MV31	M: Micrometer handle	VSM4: 1/4” swivel male FSR VSF4: 1/4” swivel female FSR ..... Please contact GENTEC for more information	S1: UHP Process Standard S2: Photovoltaic Process Standard

*: When the inlet and outlet connections are identical, only one code should be provided. If they differ, the first code corresponds to the inlet connection, while the second code is for the outlet connection.

MV4 Series bellows metering valves are designed for analytical applications.



SL-MV40M-VM4-S2



SL-MV40M-VSF4-S2

Features

- Bellows seal type
- With position locking function
- Adjusting stroke: 6 turns
- Six turns will open the valve to maximum flow
- End connection: FSR, TW
- Panel mounting and Bottom mounting are standard

Materials

- Body: 316L, 316L VAR
- Bellows: 316L
- Valve Stem: 316

Specifications

- Flow Capacity:
  Cv=0.02 (MV40 Series), Cv=0.30 (MV41 Series)
- Across Seat Leakage: ≤ $4x10^{-9}$ atm cc/sec He
- Inboard Leakage:
  ≤ $4x10^{-7}$ atm cc/sec He (MV40 Series)
  ≤ $4x10^{-7}$ atm cc/sec He (MV41 Series)
- Proof Pressure: 150% of maximum rated pressure
- Burst Pressure: 400% of maximum rated pressure

Operating Conditions

- Maximum Operating Pressure: 700 psi
- Temperature: -20°F ~ 600°F (-28°C ~ 315°C)

Wetted Surface

- Wetted Surface: Ra 7 μin

Internal Volume

- Internal Volume: 1.6 cc

Dimensions

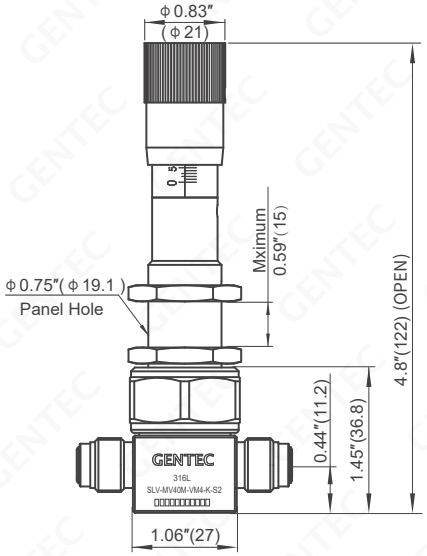

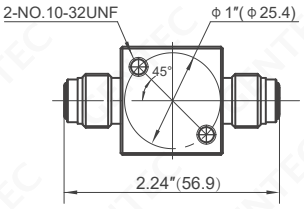

VM4

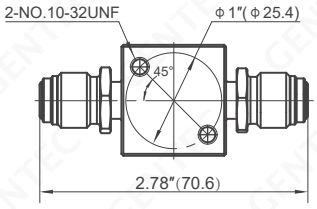

VSM4

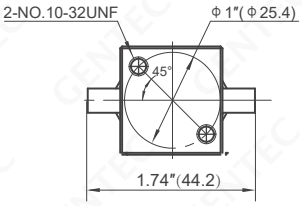

TW4

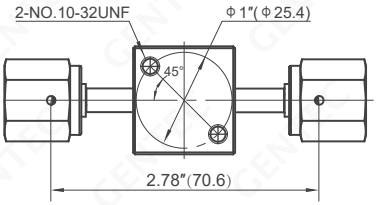

VSF4

Dimension: in.(mm)

Flow Data

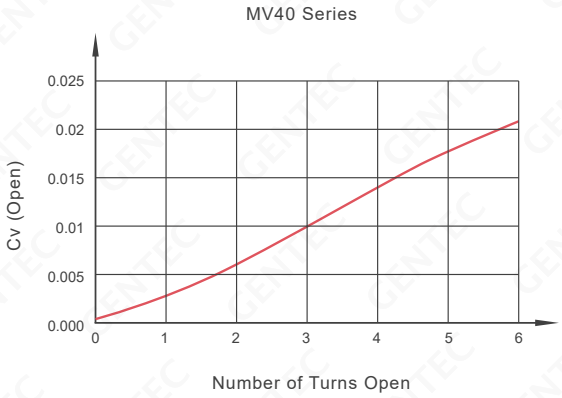

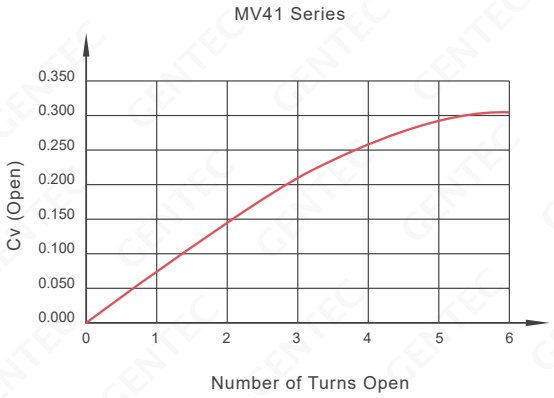

Ordering Information

EX: SL	- MV40	M	- VM4	- S2
Body Material	**Valve Series**	**Knob Type**	**Inlet / Outlet Connection***	**Process Standard**
SL: 316L SLV: 316L VAR	MV40 MV41	M: Micrometer handle	VM4: 1/4" internal male FSR TW4: 1/4" weld stub VSM4: 1/4" swivel male FSR VSF4: 1/4" swivel female FSR ..... Please contact GENTEC for more information	S2: Photovoltaic Process Standard

*: When the inlet and outlet connections are identical, only one code should be provided. If they differ, the first code corresponds to the inlet connection, while the second code is for the outlet connection.

UFS series flow switches are used with corresponding electrical devices (light, low voltage audible / visual alarms and relays,etc.) for the over-flow alarm of ultra-high purity gas, toxic gas or corrosive gas in the semiconductor industry.



Features

- Suitable for ultra-high purity gas systems
- When the flow rate is higher than the set value, the output switching signal
- Meet SEMI standards
- Meet the cleanliness standards of semiconductor manufacturing equipment
- Operating pressure from Vacuum to 3500 psi
- 100% factory inspection

Specifications

- Trip Points:
  10 slpm, 25 slpm, 50 slpm, 100 slpm (N_2 at 100 psi)
- Flow Switch Accuracy: ±10%
- Pressure Difference at Flow Switch Trigger Point: 0.5 psi
- Installation Orientation:
  Vertical within 8° and inlet port at the bottom
- Burst Pressure: 10000 psi
- Proof Pressure: 5000 psi
- Operating Temperature: -9.4°F ~ 176°F (-23°C ~ 80°C)
- External Leakage: $1x10^{-11}$ atm.cc/sec He
- Wetted Surface: Ra 10 µin
- Internal Volume: 1.9 cm^3

Reed Switch Type	SPDT, 3 wire / 2 position
Power	DC/AC 30V / 3 W max
Switching Current	0.2 A max
Carrying Current	0.5 A max
Initial Contact Resistance	0.1 Ω max
Cable: # 24 awg, PVC jacket, 3 meters	Blue: Common
	Brown: Normally Closed
	Black: Normally Open

Dimensions

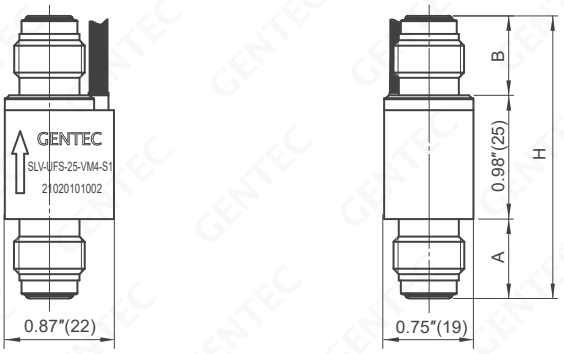

Connection Inlet-Outlet	Dimensions			
	H	A	B	J hex
VM4	2.25″ (57)	0.625″ (16)	0.625″ (16)	-
VSF4	3.99″ (101)	1.495″ (38)	1.495″ (38)	S 0.75″ (S 19)
TW4	2.25″ (57)	0.625″ (16)	0.625″ (16)	-
VM4-VSF4	3.12″ (79)	0.625″ (16)	1.495″ (38)	S 0.75″ (S 19)
VM4-TW4	2.25″ (57)	0.625″ (16)	0.625″ (16)	-
VSF4-VM4	3.12″ (79)	1.495″ (38)	0.625″ (16)	S 0.75″ (S 19)
VSF4-TW4	3.12″ (79)	1.495″ (38)	0.625″ (16)	S 0.75″ (S 19)
TW4-VM4	2.25″ (57)	0.625″ (16)	0.625″ (16)	-
TW4-VSF4	3.12″ (79)	0.625″ (16)	1.495″ (38)	S 0.75″ (S 19)

Dimension: in.(mm)
"J hex" indicates the hexagon dimension of the VSF4 nut

Ordering Information

EX:	SLV	- UFS	- 25	- VM4	- S1
	Body Material	Series Number	Flow Switch Size	Inlet / Outlet Connection*	Process Standard
	SLV: 316L VAR	UFS	10: 10 slpm 25: 25 slpm 50: 50 slpm 100: 100 slpm	VM4: 1/4" internal male FSR VSF4: 1/4" swivel female FSR TW4: 1/4" weld stub ..... Please contact GENTEC for more information	S1: UHP Process Standard

*: When the inlet and outlet connections are identical, only one code should be provided. If they differ, the first code corresponds to the inlet connection, while the second code is for the outlet connection.

UFS20, UFS30 SERIES

Flow Switch

Solutions for Life

UFS20, UFS30 series is excess flow switch with bypass design utilizing UFS resides in bypass leg with a mainline orifice between the legs to create a pressure drop for tripping, when the mainline flow continually increasing to the flow trip points range, continually increasing to the flow trip points range. It can be used in Bulk Specialty Gas Systems (BSGS), especially suitable for the over-flow fault alarm of ultra-high purity gas, toxic gas or corrosive gas in the semiconductor industry.

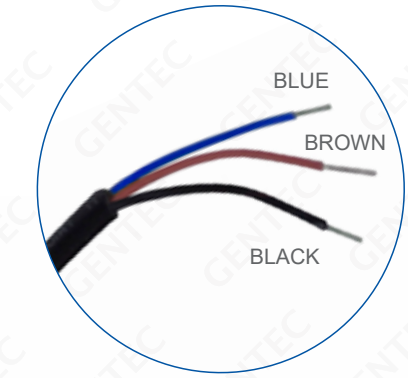



Features

- Magnetic reed switch
- Meet SEMI standards
- Working Pressure:
  1/2″: Vacuum to 3500 psi
  3/4″, 1″: Vacuum to 2400 psi
- 100% factory inspection

Wetted Materials

- Flow Sensing Parent and Float Assembly: 316L VAR
- Metal Gasket: Ni200
- Surface Treatment: electrolytic polishing and passivation

Specifications

- Trip Point:
  1/2″: 225 slpm, 350 slpm, 500 slpm, 950 slpm
  3/4″: 1100 slpm, 1650 slpm, 2600 slpm
  1″: 3000 slpm, 4000 slpm
- Flow Switch Accuracy: ±20%
- Proof Pressure: 150% of maximum rated pressure
- Burst Pressure: 300% of maximum rated pressure
- Operating Temperature: -9.4°F ~ 176°F (-23°C ~ 80°C)
- External Leakage: $1x10^{-11}$ atm.cc/sec He
- Wetted Surface: Ra max 0.25 μm
- Internal Volume: 1.9 cm^3
- Installation Orientation: Vertical within 8° and inlet port at the bottom,available with horizontal or vertical main line (according to the arrow direction)

Reed Switch Type	SPDT, 3 wire / 2 position
Power	DC/AC 30V / 3 W max
Switching Current	0.2 A max
Carrying Current	0.5 A max
Initial Contact Resistance	0.1 Ω max
Cable: # 24 awg, PVC jacket, 3 meters	Blue: Common
	Brown: Normally Closed
	Black: Normally Open

*: 1) Nominal conditions: Pressure 100 psi, Temperature 68°F, Nitrogen gas. When deviating from the nominal conditions, the actual working flow rate shall be corrected by the pressure, gas & temperature correction factor.

Dimensions

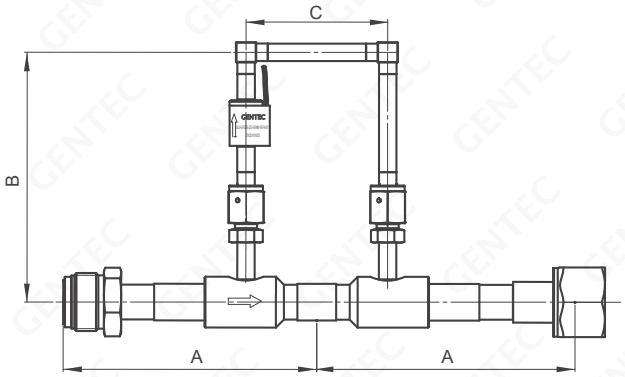

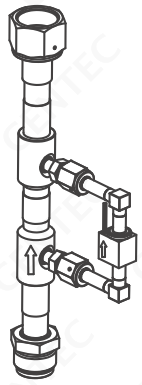

UFS20
Vertical Assembly

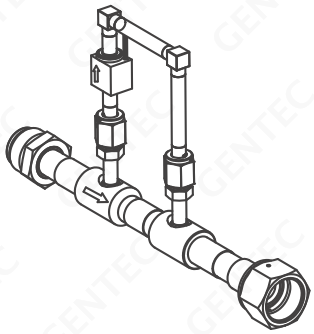

UFS30
Horizontal Assembly

Connection Inlet - Outlet	Dimensions			
	A	B (Horizontal)	B (Vertical)	C
VSM8 - VSF8	3.55″ (90.1)	4.55″ (115.6)	2.78″ (70.7)	3.05″ (77.5)
TW8	2.59″ (65.8)	4.55″ (115.6)	2.78″ (70.7)	3.05″ (77.5)
VSM12 - VSF12	5.51″ (140.0)	5.44″ (138.2)	3.59″ (91.2)	3.05″ (77.5)
TW12	3.48″ (88.4)	5.44″ (138.2)	3.59″ (91.2)	3.05″ (77.5)
VSM16 -VSF16	6.22″ (158.0)	5.57″ (141.5)	3.72″ (94.5)	3.05″ (77.5)
TW16	3.88″ (98.5)	5.57″ (141.5)	3.72″ (94.5)	3.05″ (77.5)

Dimension: in.(mm)

Ordering Information

Ex:	SL	- UFS20	- 225	- VSF8	- S1
	Body Material	Series Number	Flow Switch Size	Inlet / Outlet Connection*	Process Standard
	SL: 316L	UFS20 UFS30	225: 225 slpm 350: 350 slpm 500: 500 slpm 950: 950 slpm	VSM8: 1/2” swivel male FSR VSF8: 1/2” swivel female FSR TW8: 1/2” weld stub	S1: UHP Process Standard
			1100: 1100 slpm 1650: 1650 slpm 2600: 2600 slpm	VSM12: 3/4” swivel male FSR VSF12: 3/4” swivel female FSR TW12: 3/4” weld stub	
			3000: 3000 slpm 4000: 4000 slpm	VSM16: 1” swivel male FSR VSF16: 1” swivel female FSR TW16: 1” weld stub	

Correcting Trip Point for Other Pressures

To obtain the nominal trip point for operating pressures other than 100 psig, multiply the nominal trip point by the pressure correction factor (F_p).

$$F_p=\sqrt{\frac{OP}{114.7}}$$

Where OP is the operating pressure in psia.

Correcting Trip Point for Other Gases

To obtain the nominal trip point in process gases other than nitrogen, multiply the nominal trip point in nitrogen by the gas correction factor (F_G).

$$F_G=\sqrt{\frac{28}{MW}}$$

Where MW is the molecular weight g/mol of the process gas.

Correcting Trip Point for Temperature

$$Fp=\sqrt{\frac{OP}{114.7}}$$

OT = (460 + operating temperature ˚F)



Features

- Stainless Steel 316L construction
- Cleaned, welded assembled, tested and packaged in Class 100 (ISO 5) cleanroom
- Internal Wetted Surface 0.4 µm
- 660 mmHg (100 Torr) vacuum generated with a minimum source nitrogen pressure of 75 psi
- Helium leak tested
- Used in gas delivery systems to assist in purging piping systems

Vacuum Chart

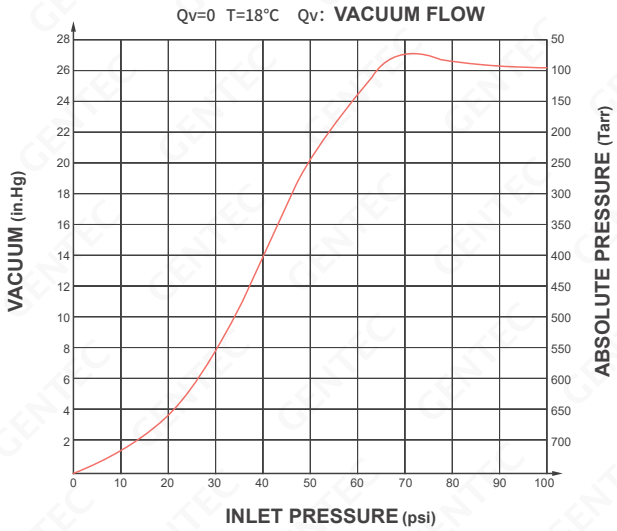

Dimensions

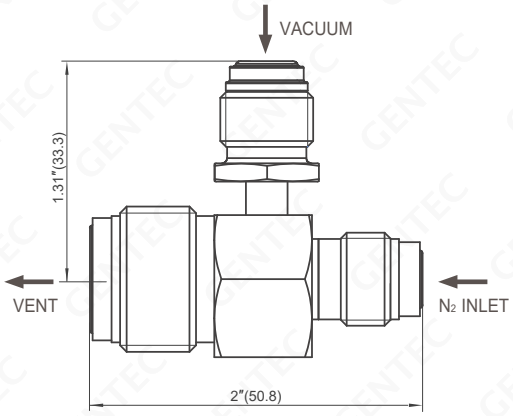

Dimension: in.(mm)

Ordering Information

EX: SL	- VG22	- VM4	- VM8	- VM4	- S2
Body Material	Series Number	N_2 Inlet	Vent Connections	Vacuum Connections	Process Standard
SL: 316L	VG22	VM4	VM4 VM8	VM4: 1/4″ face seal male VM8: 1/2″ face seal male VSM4: 1/4″ face seal swivel male VSF4: 1/4″ face seal swivel female TW4: 1/4″ tube weld	S1: UHP Process Standard S2: Photovoltaic Process Standard

VG23 series vacuum generator integrates monoblock vacuum venturi, air actuated valve and check valve, achieving a maximum vacuum of -88 kPa. The vacuum generator equipped with a constant bleed port, allowing nitrogen to bleed ensuring bleeding path of an inert state. Suitable for the semiconductor industry, etc, application.

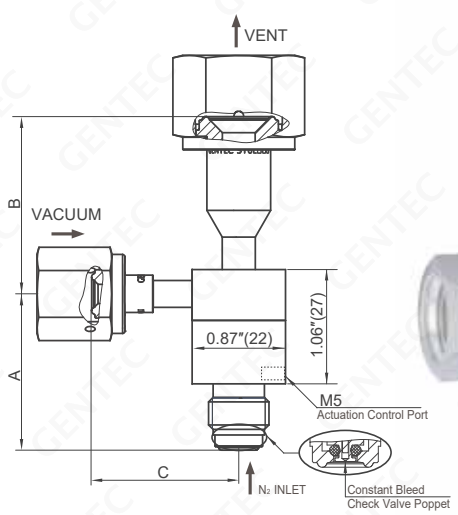



Dimension: in.(mm)

Connections	Dimensions in. (mm)			Connections	Dimensions in. (mm)	
	A	B	C		B	C
VM4	1.45" (36.9)	1.07" (27)	1.39" (35)	TW4	-	0.75" (19)
VSF4	-	1.07" (27)	1.39" (35)	TW6	0.96" (24)	-
VSM8	-	1.64" (42)	-			
VSF8	-	1.64" (42)	-			

Features

- Operating Temperature: 14°~160°F (10~71°C)

N_2 INLET

- Pressure Range: 70 ~ 110 psi
- Connection: VM4, VSF4

VACUUM

- Maximum Vacuum: - 88 kPa*
- Maximum Pressure: 3500 psi
- Proof Pressure: 150% of Operating Pressure
- Burst Pressure: 300% of Operating Pressure
- Connection: VM4,VSF4,TW4

VENT

- Connection: VM4,VSF4,VSM8,VSF8,TW6

ACTUATION VALVE

- Valve Status: Normally Closed (N.C.)
- Actuation Pressure: 60 ~ 110 psi
- Connection: M5 × 0.8

*: -88 kPa of vacuum generated with 80 psi and 68 slpm of Nitrogen.

Vacuum Chart

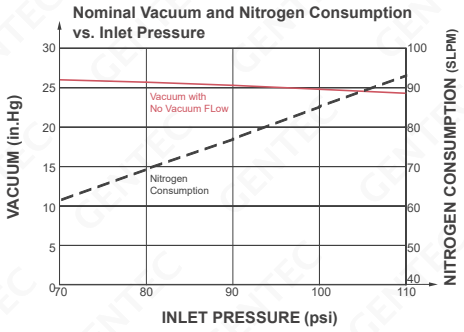

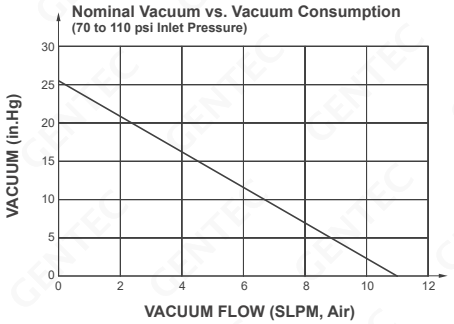

Ordering Information

EX: SL	- VG23	- VM4	- VM8	- VM4	- CB023	- R	- S2
Body Material	Series Number	N_2 Inlet	Vent Connections	Vacuum Connections	Constant Bleed Orifice (Option)	Sealing Material	Process Standard
SL: 316L	VG23	VM4, VSF4	VM4, VSF4 VSM8, VSF8 TW6	VM4, VSF4 TW4	None: without constant bleed orifice CB005: 1~2.5 slpm @80 psig N2 CB009: 2~5 slpm @80 psig N2 CB013: 5~8 slpm @80 psig N2 CB023: 10~15 slpm @80 psig N2	R: FKM Y: EPDM	S1: UHP Process Standard S2: Photovoltaic Process Standard

GENTEC® **PU Series UHP Gas Sticks** are designed for accurate pressure control of inert gases to feed process tools.



PU2111SL-HKP-VSM4



PU2211SL-HKP-VSM8

Features

- DV86 / DV87 series diaphragm valves
  U11 / U13 / U21 / U22 series UHP regulators
- 100% Helium-leak
- Cleaned, assembled, and packaged for high purity semiconductor applications
- Inlet & Outlet Connections: 1/4″, 1/2″ VCR

Specifications

- Maximum Inlet Pressure: 500 psi, 250 psi, 150 psi
- Maximum Outlet Pressure: 100 psi, 75 psi, 50 psi
- Temperature Range: -40 ~ 165˚F (-40 ~ 74˚C)
- Wetted Surface Finish: Ra 7 μin

Materials

- Body and Diaphragm: 316L stainless steel
- Seat: PCTFE, Vespel®(Optional)

Dimensions

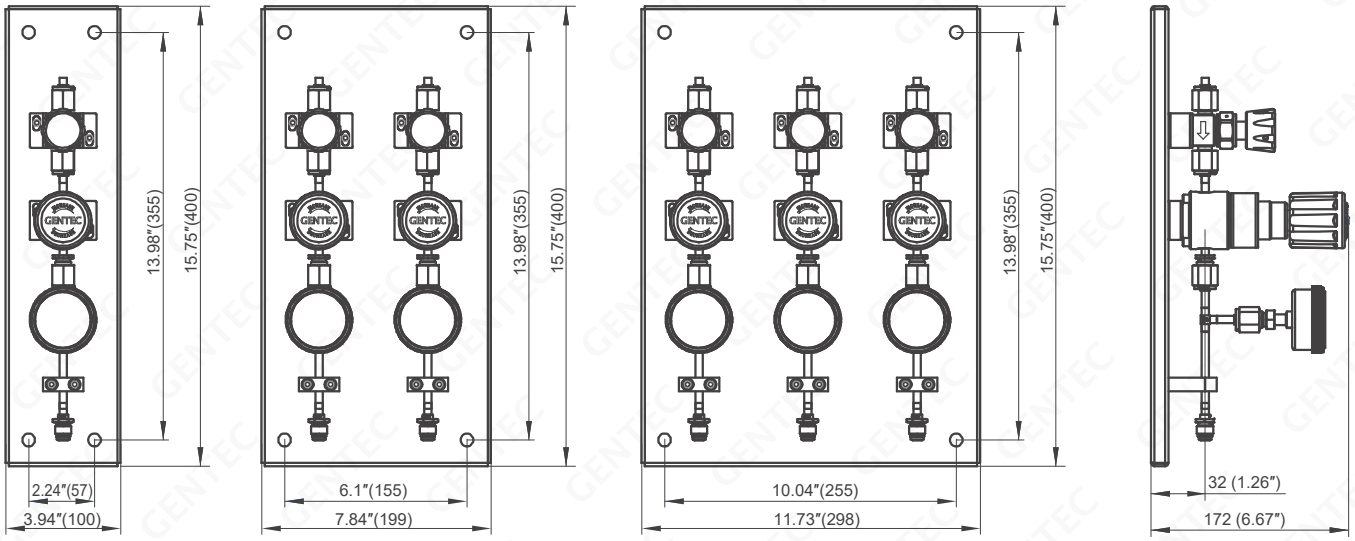

PU2111 PU2112 PU2113

Dimension: in.(mm)

Ordering Information

Ex:	PU21	1	1	SL	- H	K	P	T	- VSM4
	Series Number	Inlet & Outlet Connection	NO. of Terminals	Material	Inlet Pressure	Outlet Pressure	Gauge	Options	Inlet / Outlet Connection
	PU11: 1/4″ (U11 Regulator+DV86) PU13: 1/2″ (U13 Regulator+DV87) PU21: 1/4″ (U21 Regulator+DV86) PU22: 1/2″ (U22 Regulator+DV87)	1: 1 In, 1 Out	1: One way 2: Two way 3: Three way	SL: 316L	F: 500 psi G: 250 psi H: 150 psi	I: 100 psi J: 75 psi K: 50 psi	P: psi / bar	Blank: Pressure Guage T: Pressure Transducer C: Electronic Contact Gauges	VSM4: 1/4″ MVCR VSF4: 1/4″ FVCR VSM8: 1/2″ MVCR VSF8: 1/2″ FVCR

PRESSURE GAUGES

GU Series







Ultra-high purity pressure gauges are specifically designed for use in semiconductor processes, ultra-high purity gas systems and ultra-high purity equipment.



GU20SL-V150p/b-VSM4



GU20SL-160p/b-VSF4



GUR20SL-V150p/b-VSM4



GUR20SL-160p/b-VSF4



GUR15SL-60p/b-VSM4

Features

- Imported bourdon tube
- Assembly, calibration and packaging are performed in a Class 100 (ISO 5) cleanroom
- Electro-polished components and connection
- Product 100% helium test
  Helium leakage rate: ＜1×10^{-9} mbar*L/s
- Wetted surface: Ra 10 μin
- Accuracy: 3-2-3
- Meet semi standards
- ASME B40.100

Operating Conditions

- Range: vacuum to 4000 psi
- Temperature Range: -40 ~ 150˚F (-40 ~ 65˚C)
- Medium: high purity, corrosive gases and liquids

Materials

- Bourdon Tube: 316L
- Socket: 316L

Dimensions

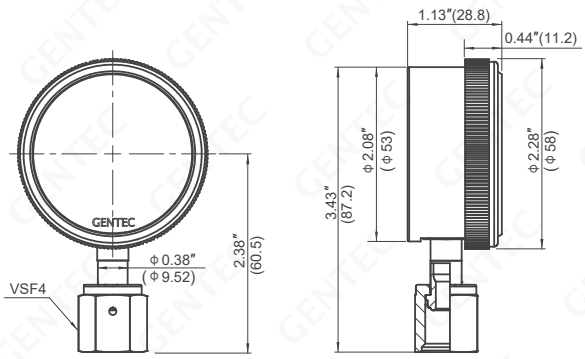

GU20SL-*-VSF4

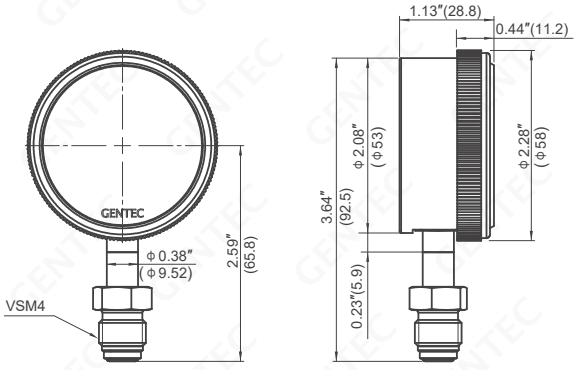

GU20SL-*-VSM4

Dimension: in.(mm)

Dimensions

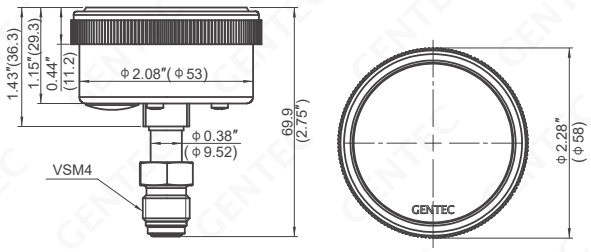

GUR20SL-*-VSM4

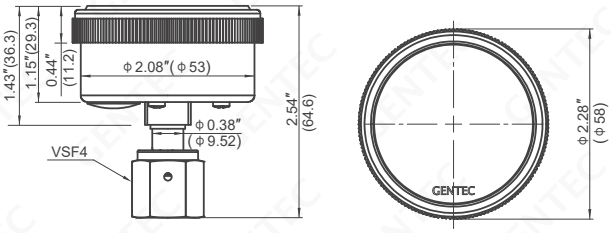

GUR20SL-*-VSF4

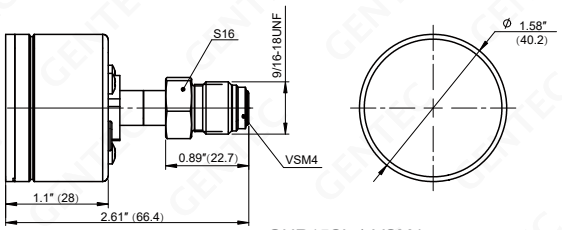

GUR15SL-*-VSM4

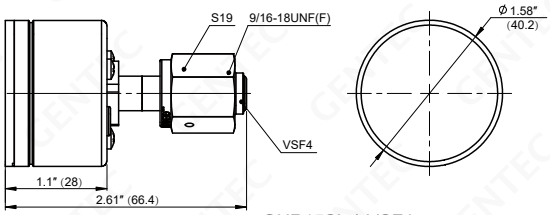

GUR15SL-*-VSF4

Dimension: in.(mm)

Pressure Range

Model Number		Model Number		Pressure Ranges (psi)**
1/4" FSR(M)*, Radial	1/4" FSR(M)*, Axial	1/4" FSR(F)*, Radial	1/4" FSR(F)*, Axial	
GU20SL-30-VSM4	GUR20SL-30-VSM4, GUR15SL-30-VSM4	GU20SL-30-VSF4	GUR20SL-30-VSF4, GUR15SL-30-VSF4	0 ~ 30 ***
GU20SL-60-VSM4	GUR20SL-60-VSM4, GUR15SL-60-VSM4	GU20SL-60-VSF4	GUR20SL-60-VSF4, GUR15SL-60-VSF4	0 ~ 60
GU20SL-100-VSM4	GUR20SL-100-VSM4, GUR15SL-100-VSM4	GU20SL-100-VSF4	GUR20SL-100-VSF4, GUR15SL-100-VSF4	0 ~ 100
GU20SL-160-VSM4	GUR20SL-160-VSM4, GUR15SL-160-VSM4	GU20SL-160-VSF4	GUR20SL-160-VSF4, GUR15SL-160-VSF4	0 ~ 160
GU20SL-200-VSM4	GUR20SL-200-VSM4, GUR15SL-200-VSM4	GU20SL-200-VSF4	GUR20SL-200-VSF4, GUR15SL-200-VSF4	0 ~ 200
GU20SL-300-VSM4	GUR20SL-300-VSM4, GUR15SL-300-VSM4	GU20SL-300-VSF4	GUR20SL-300-VSF4, GUR15SL-300-VSF4	0 ~ 300
GU20SL-600-VSM4	GUR20SL-600-VSM4, GUR15SL-600-VSM4	GU20SL-600-VSF4	GUR20SL-600-VSF4, GUR15SL-600-VSF4	0 ~ 600
GU20SL-1000-VSM4	GUR20SL-1000-VSM4, GUR15SL-1000-VSM4	GU20SL-1000-VSF4	GUR20SL-1000-VSF4, GUR15SL-1000-VSF4	0 ~ 1000
GU20SL-2000-VSM4	GUR20SL-2000-VSM4	GU20SL-2000-VSF4	GUR20SL-2000-VSF4	0 ~ 2000 ***
GU20SL-3000-VSM4	GUR20SL-3000-VSM4	GU20SL-3000-VSF4	GUR20SL-3000-VSF4	0 ~ 3000 ***
GU20SL-4000-VSM4	GUR20SL-4000-VSM4	GU20SL-4000-VSF4	GUR20SL-4000-VSF4	0 ~ 4000 ***
GU20SL-V30-VSM4	GUR20SL-V30-VSM4	GU20SL-V30-VSF4	GUR20SL-V30-VSF4	30 in Hg VAC ~ 30
GU20SL-V60-VSM4	GUR20SL-V60-VSM4, GUR15SL-V60-VSM4	GU20SL-V60-VSF4	GUR20SL-V60-VSF4, GUR15SL-V60-VSF4	30 in Hg VAC ~ 60
GU20SL-V100-VSM4	GUR20SL-V100-VSM4	GU20SL-V100-VSF4	GUR20SL-V100-VSF4	30 in Hg VAC ~ 100
GU20SL-V150-VSM4	GUR20SL-V150-VSM4	GU20SL-V150-VSF4	GUR20SL-V150-VSF4	30 in Hg VAC ~ 150
GU20SL-V200-VSM4	GUR20SL-V200-VSM4	GU20SL-V200-VSF4	GUR20SL-V200-VSF4	30 in Hg VAC ~ 200
GU20SL-V300-VSM4	GUR20SL-V300-VSM4	GU20SL-V300-VSF4	GUR20SL-V300-VSF4	30 in Hg VAC ~ 300

* FSR - Face Seal Fittings ** All gauges are dual scale *** Special Order

Ordering Information

Ex: GU20SL	- 60	P	- VSM4	- S1
Series	Pressure Ranges	Pressure Unit	Inlet Connection	Process Standard
GU20SL: 2″, Radial GUR20SL: 2″, Axial GUR15SL: 1.5″, Axial	30 60 100	p/b: psi / bar p/k: psi / kPa	VSM4: 1/4" Face seal swivel male (FSR fittings) VSF4: 1/4" Face seal swivel female (FSR fittings) ..... Please contact GENTEC for more information	S1: UHP Process Standard S2: Photovoltaic Process Standard

The GURA20SL series ultra-high purity contact gauges are suitable for applications in the semiconductor, electronics, medical, biotechnology, and pharmaceutical industries.

These contact gauges operate based on the principle of a reed tube and magnet within the gauge. As the pressure indicator needle (which contains a magnet) rotates, it triggers the reed tube contact, causing it to either open or disconnect. This mechanism allows for automatic control and alarm functions, ensuring precise monitoring and timely response.



GURA20SL-V60p/b-VSM4

Features

- Can be used for automatic control and signal warning of pressure systems
- Alarm point can be set, the setting range is 5% ~ 50% of the full scale
- Imported bourdon tube
- Assembly, calibration and packaging are performed in a Class 100 (ISO 5) cleanroom
- Electro-polished components and connection
- Helium Leakage Rate: ＜1×10^{-9} mbar*L/s
- Wetted Surface: Ra 10 μin
- Accuracy: 3-2-3
- Meet semi standards



GURA20SL-V60p/b-VSF4

Operating Conditions

- Temperature Range: -40 ~ 158˚F (-40 ~ 70˚C)
- Medium: high purity gases and liquids
- Maximum Operating Voltage: 24 VDC
- Maximum Witching Current: 0.5 A
- Contact Power: 10 W

Materials

- Bourdon Tube: 316L
- Socket: 316L

Dimensions

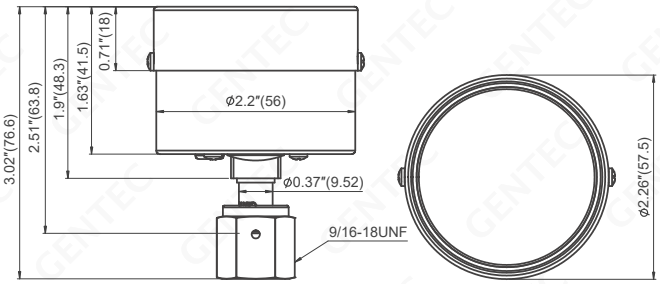

GURA20SL-*-VSF4

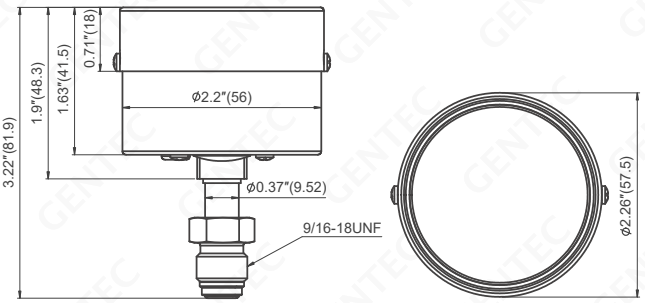

GURA20SL-*-VSM4

Dimension: in.(mm)

Pressure Range

Model Number		Pressure Ranges
1/4″ FSR*, Axial	1/4″ FSR(F)*, Axial	(psi)**
GURA20SL-100-VSM4	GURA20SL-100-VSF4	0 ~ 100
GURA20SL-160-VSM4	GURA20SL-160-VSF4	0 ~ 160
GURA20SL-200-VSM4	GURA20SL-200-VSF4	0 ~ 200
GURA20SL-300-VSM4	GURA20SL-300-VSF4	0 ~ 300
GURA20SL-400-VSM4	GURA20SL-400-VSF4	0 ~ 400
GURA20SL-600-VSM4	GURA20SL-600-VSF4	0 ~ 600
GURA20SL-V60-VSM4	GURA20SL-V60-VSF4	30 in Hg VAC ~ 60

* FSR - Face Seal Fittings

** All gauges are dual scale

Ordering Information

Ex:	GURA20SL	- 60	P	- VSM4	- S1
	Series	Pressure Ranges	Pressure Unit	Inlet Connection	Process Standard
	GURA20SL: 2″, Axial	30 60 100	p/b: psi / bar p/k: psi / kPa	VSM4: 1/4" Face seal swivel male (FSR fittings) VSF4: 1/4" Face seal swivel female (FSR fittings) ..... Please contact GENTEC for more information	S1: UHP Process Standard

FACE SEAL FITTINGS





GENTEC® specializes in designing and manufacturing high quality valves and fittings for high purity and ultra-high purity applications. GENTEC® FSR fittings are availabe in 316, 316L, 316 VAR or 316 VIM VAR and supplied in BA or EP grade. Fittings are cleaned, bagged individually in nylon bags, and heat-sealed. The inner bag is then placed in a polyethylene outer bag and heat-sealed in a Class 100 (ISO 5) cleanroom to meet this stringent demands of the semiconductor industry.

Material	Ordering Number Designator	Applicable Specification
Bodies, Nuts, Caps and Plugs		
316	SS	Bar Stock: ASME SA479, ASTM A276 Forged Shapes: ASME SA182, ASTM A314
Glands		
316L	SL	Bar Stock: ASME SA479, ASTM A276 Forged Shapes: ASME SA182
316L VAR	SLV	Bar Stock: SEMI F20-0997 Forged Shapes: SEMI F20-0997
316L VIM VAR	SLVV	
Gaskets		
Nickel	NI	ASTM B162
316L	SS	ASTM A240, ASTM A167

▶ **Plating**

FSR Female Nuts are silver-plated to ensure optimal performance. To maintain the integrity of the plating, avoid chemical cleaning processes, electropolishing, and passivation, as these can damage or remove the plating.

If the plating is compromised, thread galling may occur, which can damage fitting components and prevent the formation of a proper seal.

▶ **Dimensions**

Dimensions are in inches for reference only and subject to change without notice.

▶ **Pressure Ratings**

Ratings are based upon tests conducted using FSR assemblies.

All ratings comply with calculations per ANSI Code for Pressure Piping B31.3.

Working Pressureratings determined at room temperature. Allowable Working Pressureof elevated temperatures could be obtained by multiplying factors shown in the following table.

Pressure & Temperature Ratings

Testing

FSR assemblies have been helium-leak tested to a rate of 1 x 10^{-9} std cc/sec.

Ultra-high purity

A range of FSR face seal glands and bodies are available with controlled wetted surfaces, electropolished, and specially cleaned to meet ultra-high purity system requirements.

The pressure ratings in this catalog are based on ASME B31.3 and ASME B31.1 standards for Stainless Steel 316, with a permissible stress value of 20,000 psi (1378 bar) in the temperature range of -20 to 100°F (-28 to 37°C).
For temperatures above 100°F (37°C), the operating pressure is calculated using the temperature coefficients provided in the table below.

Temperature °F (°C)	Factors (316)	Factors (316L)
-20(-28) ~ 100 (37)	1.00	1.00
200 (93)	1.00	0.83
400 (204)	0.96	0.77
600 (315)	0.85	0.67
800 (427)	0.79	0.62
1000 (537)	0.76	0.56

Components	Material	Temperature °C (°F)
Fittings	316	537 (1000)
	316L	537 (1000)
	316L VAR	537 (1000)
Gaskets	316	537 (1000)
	Nickel	315 (600)

Example: SL-VDS-FSR4-T4L2 Short welded tube has a pressure rating of 5100 psi.
The pressure rating at 400°F (204°C) is calculated by: 5100 psi x 0.77 =3927 psi

Ordering Information

To order EP fittings, use the following Designator code as a suffix to the Ordering Number.
Example: SLV-VDS-FSR4-T4L7P

Wetted Surface Grade	Designator	Wetted Surface
BA	-	10 µin (0.25 µm)
EP	P	5 µin (0.13 µm)

Configuration

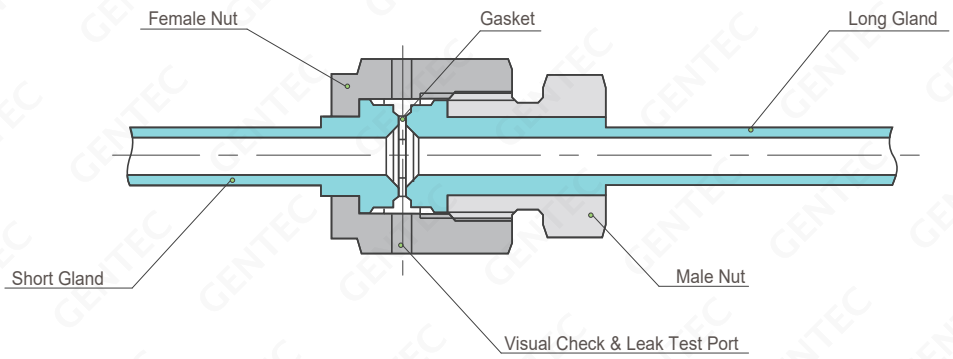

• Nut: The internal threads are silver-plated to prevent galling and ensure consistent assembly.
• Visual Inspection & Leak Test Ports: Each nut is equipped with two leak detection ports, allowing for easy and efficient leak testing.

Heat Code Traceability

Material heat code is stamped on glands and bodies to ensure raw material traceability.

Glands

Short Tube Butt Weld



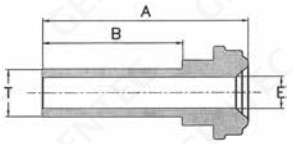

FSR Size	TUBE O.D.	Ordering Number *	Dimensions (in.) B	E	A	Normal Wall Thickness	Pressure Rating (psi)
1/8″	1/8″	SL-VDS-FSR2-T4L7	0.75	0.07	1.08	0.028	8500
1/4″	1/4″	SL-VDS-FSR4-T4L2	0.25	0.18	0.60	0.035	5100
1/4″	1/4″	SL-VDS-FSR4-T4L7	0.75	0.18	1.10	0.035	5100
1/2″	3/8″	SL-VDS-FSR8-T6L7	0.75	0.31	1.12	0.035	3300
1/2″	1/2″	SL-VDS-FSR8-T8L2	0.25	0.40	0.62	0.049	3500
1/2″	1/2″	SL-VDS-FSR8-T8L7	0.75	0.40	1.12	0.049	3500
3/4″	3/4″	SL-VDS-FSR12-T12L7	0.75	0.65	1.38	0.049	2400

*: 316L VAR / 316L VIM VAR stainless steel is available, please replace SL with SLV / SLVV.

Long Tube Butt Weld



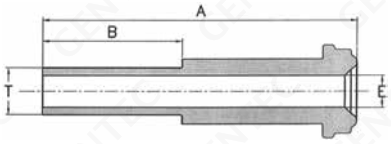

FSR Size	TUBE O.D.	Ordering Number *	Dimensions (in.) B	E	A	Normal Wall Thickness	Pressure Rating (psi)
1/8″	1/8″	SL-VD-FSR2-T4L7	0.75	0.07	1.42	0.028	8500
1/4″	1/4″	SL-VD-FSR4-T4L2	0.25	0.18	1.20	0.035	5100
1/4″	1/4″	SL-VD-FSR4-T4L7	0.75	0.18	1.70	0.035	5100
1/2″	3/8″	SL-VD-FSR8-T6L7	0.75	0.31	1.79	0.035	3300
1/2″	1/2″	SL-VD-FSR8-T8L2	0.25	0.40	1.29	0.049	3500
1/2″	1/2″	SL-VD-FSR8-T8L7	0.75	0.40	1.79	0.049	3500
3/4″	3/4″	SL-VD -FSR12-T12L7	0.75	0.65	2.03	0.049	2400
1″	1″	SL-VD -FSR16-T16L7	0.75	0.87	2.32	0.065	2400

*: 316L VAR / 316L VIM VAR stainless steel is available, please replace SL with SLV / SLVV.

Bodies

Male NPT Connector



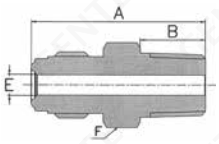

FSR Size	Male NPT Size	Ordering Number	Dimensions (in.) B	E	F	A	Pressure Rating (psi)
1/4″	1/4″	SS-VMC-VM4-NT4	0.56	0.18	5/8	1.49	8000
1/2″	1/2″	SS-VMC-VM8-NT8	0.75	0.40	15/16	1.84	3500
3/4″	3/4″	SS-VMC-VM12-NT12	0.75	0.62	1-5/16	2.19	3000
1″	1″	SS-VMC-VM16-NT16	0.94	0.87	1-5/8	2.47	2400

Bodies

Male FSR to Female NPT Connector



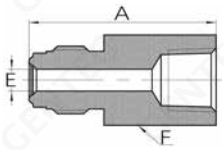

FSR Size	Female NPT Size	Ordering Number	Dimensions (in.)			Pressure Rating (psi)
			E	F	A	
1/4″	1/8″	SS-VMC-VM4-FNT2	0.18	5/8	1.41	6500
1/4″	1/4″	SS-VMC-VM4-FNT4	0.18	9/16	1.54	6500
1/4″	3/8″	SS-VMC-VM4-FNT6	0.18	7/8	1.54	4300
1/2″	3/8″	SS-VMC-VM8-FNT6	0.40	15/16	1.76	4300
1/2″	1/2″	SS-VMC-VM8-FNT8	0.40	1-1/16	1.99	4300
3/4″	3/4″	SS-VMC-VM12-FNT12	0.62	1-5/16	2.36	3700
1″	1″	SS-VMC-VM16-FNT16	0.87	1-5/8	2.51	3000

Male FSR to GENLOK Connector



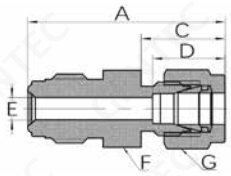

FSR Size	GENLOK Size	Ordering Number	Dimensions (in.)						Pressure Rating (psi)
			A	C	D	E	F	G	
1/4″	1/8″	SS-VMC-VM4-TF2	1.53	0.60	0.50	0.09	5/8	7/16	10000
1/4″	1/4″	SS-VMC-VM4-TF4	1.62	0.70	0.60	0.18	5/8	9/16	8000
1/4″	3/8″	SS-VMC-VM4-TF6	1.62	0.76	0.66	0.18	5/8	11/16	4300
1/2″	3/8″	SS-VMC-VM8-TF6	1.84	0.76	0.66	0.28	15/16	11/16	4300
1/2″	1/2″	SS-VMC-VM8-TF8	1.95	0.86	0.90	0.40	15/16	7/8	4300

Male FSR Bulkhead to GENLOK Connector



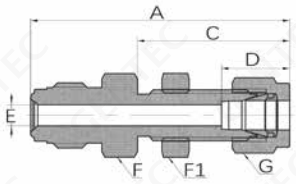

FSR Size	GENLOK Size	Ordering Number	Dimensions (in.)							Pressure Rating (psi)
			A	C	D	E	F	F1	G	
1/4″	1/4″	SS-VMCB-VM4-TF4	2.25	1.32	0.60	0.18	5/8	5/8	9/16	8000
1/4″	3/8″	SS-VMCB-VM4-TF6	2.35	1.45	0.66	0.18	5/8	3/4	11/16	4300
1/2″	3/8″	SS-VMCB-VM8-TF6	2.54	1.45	0.66	0.28	15/16	3/4	11/16	4300
1/2″	1/2″	SS-VMCB-VM8-TF8	2.74	1.65	0.90	0.40	15/16	15/16	7/8	4300

Bodies

Female FSR to Male NPT Connector



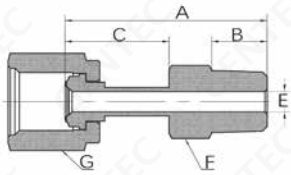

FSR Size	NPT Size	Ordering Number	Dimensions (in.)						Pressure Rating (psi)
			Size	B	C	E	F	G	
1/4″	1/8″	SS-VSFC-VSF4-NT2	1.58	0.38	0.95	0.18	7/16	3/4	8000
1/4″	1/4″	SS-VSFC-VSF4-NT4	1.79	0.56	0.92	0.18	9/16	3/4	8000
1/4″	3/8″	SS-VSFC-VSF4-NT6	1.93	0.56	1.00	0.18	11/16	3/4	4300
1/2″	3/8″	SS-VSFC-VSF8-NT6	1.89	0.56	1.00	0.40	11/16	1-1/16	4300
1/2″	1/2″	SS-VSFC-VSF8-NT8	2.09	0.75	1.00	0.40	7/8	1-1/16	4300

Female FSR to Female NPT Connector



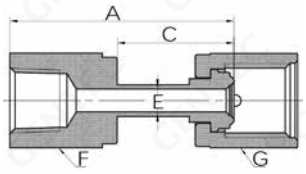

FSR Size	NPT Size	Ordering Number	Dimensions (in.)					Pressure Rating (psi)
			Size	C	E	F	G	
1/4″	1/4″	SS-VSFC-VSF4-FNT4	1.77	0.92	0.18	3/4	3/4	6600
1/2″	3/8″	SS-VSFC-VSF8-FNT6	1.95	1.06	0.40	7/8	1-1/16	4300
1/2″	1/2″	SS-VSFC-VSF8-FNT8	2.18	1.04	0.40	1-1/16	1-1/16	4300

Female FSR to GENLOK Connector



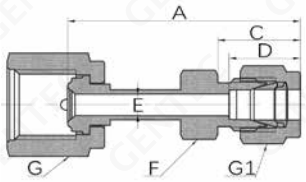

FSR Size	GENLOK Size	Ordering Number	Dimensions (in.)							Pressure Rating (psi)
			Size	C	D	E	F	G	G1	
1/4″	1/8″	SS-VMFC-VSF4-TF2	1.94	0.59	0.49	0.18	1/2	3/4	7/16	8000
1/4″	1/4″	SS-VMFC-VSF4-TF4	1.94	0.70	0.60	0.18	1/2	3/4	9/16	8000
1/4″	3/8″	SS-VMFC-VSF4-TF6	1.97	0.76	0.66	0.18	5/8	3/4	11/16	4300
1/4″	1/2″	SS-VMFC-VSF4-TF8	2.14	0.86	0.90	0.18	13/16	3/4	7/8	4300
1/2″	1/2″	SS-VMFC-VSF8-TF8	2.23	0.86	0.90	0.40	13/16	1-1/16	7/8	4300

Double Male Union



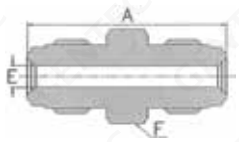

FSR Size	Ordering Number	Dimensions (in.)			Pressure Rating (psi)
		E	F	A	
1/4″	SS-VU-VM4	0.18	5/8	1.55	8000
1/2″	SS-VU-VM8	0.40	15/16	1.84	3500
3/4″	SS-VU-VM12	0.62	1-5/16	2.44	3000
1″	SS-VU-VM16	0.87	1-5/8	2.59	2400

Bodies

Bulkhead Union



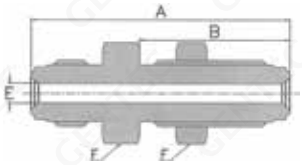

FSR Size	Ordering Number	Dimensions (in.) B	E	F	A	Panel Hole Size	MAX. Panel Thickness	Pressure Rating (psi)
1/4″	SS-VBU-VM4	1.30	0.18	3/4	2.23	19/32	0.44	8000
1/2″	SS-VBU-VM8	1.48	0.40	1-1/16	2.57	29/32	0.50	3500

FSR to Male NPT Elbow



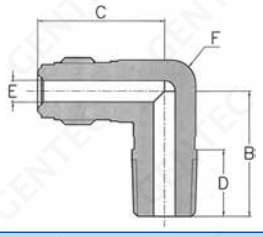

FSR Size	Male NPT Size	Ordering Number	Dimensions (in.) C	B	D	E	F Wrench Flat	Pressure Rating (psi)
1/4″	1/4″	SS-VME-VM4-NT4	1.07	1.05	0.56	0.18	1/2	8000
1/2″	1/2″	SS-VME-VM8-NT4	1.45	1.45	0.75	0.40	13/16	3500

Union Elbow



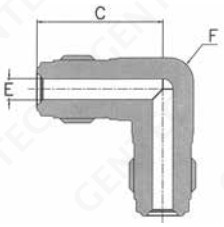

FSR Size	Ordering Number	Dimensions (in.) C	E	F Wrench Flat	Pressure Rating (psi)
1/4″	SS-VUE-VM4	1.07	0.18	1/2	8000
1/2″	SS-VUE-VM8	1.45	0.40	13/16	3500
3/4″	SS-VUE-VM12	1.92	0.62	1-1/4	3000

Union Tee



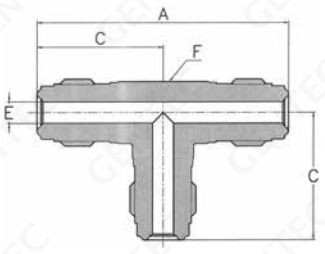

FSR Size	Ordering Number	Dimensions (in.) C	E	A	F Wrench Flat	Pressure Rating (psi)
1/4″	SS-VUT-VM4	1.07	0.18	2.14	1/2	8000
1/2″	SS-VUT-VM8	1.45	0.4	2.9	13/16	3500
3/4″	SS-VUT-VM12	1.92	0.62	3.84	1-1/4	3000

Bodies

Reducing Tee



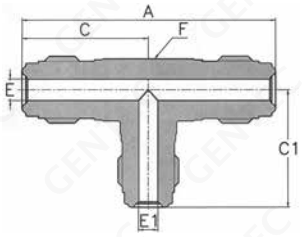

FSR Size	Ordering Number	Dimensions (in.)					F Wrench Flat	Pressure Rating (psi)
		C	C1	E	E1	A		
1/2″ x 1/4″ x 1/2″	SS-VRUT-VM8-4-8	1.45	1.25	0.40	0.18	2.90	13/16	3500
3/4″ x 1/4″ x 3/4″	SS-VRUT-VM12-4-12	1.92	1.50	0.62	0.18	3.84	1-1/4	3000
3/4″ x 1/2″ x 3/4″	SS-VRUT-VM12-8-12	1.92	1.68	0.62	0.40	3.84	1-1/4	3000

Welding Assemblies

Rotating Female Union



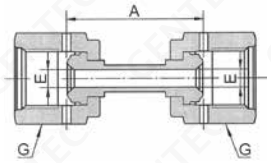

FSR Size	Ordering Number	Dimensions (in.)			Pressure Rating (psi)
		E	G	A	
1/4″	SS-VSU-VSF4	0.18	3/4	1.71	5100
1/2″	SS-VSU-VSF8	0.40	1-1/16	1.84	3500

Female Elbow



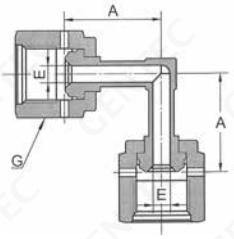

FSR Size	Ordering Number	Dimensions (in.)			Pressure Rating (psi)
		E	G	A	
1/4″	SS-VSUE-VSF4	0.18	3/4	1.0	5100
1/4″	SS-VSUE-VSM4	0.18	3/4	1.5	5100

Female Tee



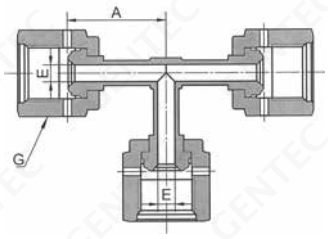

FSR Size	Ordering Number	Dimensions (in.)			Pressure Rating (psi)
		E	G	A	
1/4″	SS-VSUT-VSF4	0.18	3/4	1.0	5100
1/4″	SS-VSUT-VSM4	0.18	3/4	1.5	5100

Gaskets

Non-Retained Style



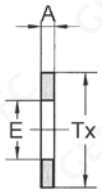

VG: Silver Plated (Stainless Steel) Non-Retained Style

FSR Size	Ordering Number	Dimensions (in.)		
	316L	E	A	TX
1/8	SS-VG-FSR2	0.09	0.028	0.26
1/4	SS-VG-FSR4	0.22	0.028	0.47
1/2	SS-VG-FSR8	0.44	0.028	0.78
3/4	SS-VG-FSR12	0.66	0.028	1.14
1	SS-VG-FSR16	0.89	0.028	1.40

*: For NI silver-plated material, please consult GENTEC.

VGE: Mirror (Stainless Steel) Non-Retained Style
VGS: Mirror (Nickel) Non-Retained Style

FSR Size	Ordering Number		Dimensions (in.)		
	316L	NI	E	A	TX
1/8	SS-VGE-FSR2	NI-VGS-FSR2	0.09	0.028	0.26
1/4	SS-VGE-FSR4	NI-VGS-FSR4	0.22	0.028	0.47
1/2	SS-VGE-FSR8	NI-VGS-FSR8	0.44	0.028	0.78
3/4	SS-VGE-FSR12	NI-VGS-FSR12	0.66	0.028	1.14
1	SS-VGE-FSR16	NI-VGS-FSR16	0.89	0.028	1.40

Gasket Retainer Assembly



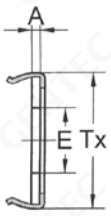

VGR: Silver Plated (Stainless Steel) Gasket Retainer Assembly

FSR Size	Ordering Number	Dimensions (in.)		
	316L	E	A	TX
1/4	SS-VGR-FSR4	0.24	0.028	0.50
1/2	SS-VGR-FSR8	0.44	0.028	0.79
3/4	SS-VGR-FSR12	0.66	0.028	1.14
1	SS-VGR-FSR16	0.89	0.028	1.40

*: For NI silver-plated material, please consult GENTEC.

VGRE: Mirror (Stainless Steel) Gasket Retainer Assembly
VGRS: Mirror (Nickel) Gasket Retainer Assembly

FSR Size	Ordering Number		Dimensions (in.)		
	316L	NI	E	A	TX
1/4	SS-VGRE-FSR4	NI-VGRS-FSR4	0.24	0.028	0.50
1/2	SS-VGRE-FSR8	NI-VGRS-FSR8	0.44	0.028	0.79
3/4	SS-VGRE-FSR12	NI-VGRS-FSR12	0.66	0.028	1.14
1	SS-VGRE-FSR16	NI-VGRS-FSR16	0.89	0.028	1.40

Blind Gasket





VG: Silver Plated (Stainless Steel) Blind Gasket

FSR Size	Ordering Number	Dimensions (in.)	
	316L	A	TX
1/4	SS-VG-FSR4-BL	0.028	0.47
1/2	SS-VG-FSR8-BL	0.028	0.78
3/4	SS-VG-FSR12-BL	0.028	1.14
1	SS-VG-FSR16-BL	0.028	1.40

*: For NI silver-plated material, please consult GENTEC.

VGE: Mirror (Stainless Steel) Blind Gasket
VGS: Mirror (Nickel) Blind Gasket

FSR Size	Ordering Number		Dimensions (in.)	
	316L	NI	A	TX
1/4	SS-VGE-FSR4-BL	NI-VGS-FSR4-BL	0.028	0.47
1/2	SS-VGE-FSR8-BL	NI-VGS-FSR8-BL	0.028	0.78
3/4	SS-VGE-FSR12-BL	NI-VGS-FSR12-BL	0.028	1.14
1	SS-VGE-FSR16-BL	NI-VGS-FSR16-BL	0.028	1.40

Gaskets

Mirror Gasket (with flow-limiting holes)



FSR Size	Ordering Number		Dimensions (in.)		
	316L	NI	E	A	TX
1/4	SS-VGE-FSR4-01	NI-VGS-FSR4-01	0.00394	0.028	0.47
1/4	SS-VGE-FSR4-015	NI-VGS-FSR4-015	0.00591	0.028	0.47
1/4	SS-VGE-FSR4-02	NI-VGS-FSR4-02	0.00787	0.028	0.47
1/4	SS-VGE-FSR4-025	NI-VGS-FSR4-025	0.00984	0.028	0.47
1/4	SS-VGE-FSR4-03	NI-VGS-FSR4-03	0.01181	0.028	0.47
1/4	SS-VGE-FSR4-04	NI-VGS-FSR4-04	0.01575	0.028	0.47
1/4	SS-VGE-FSR4-05	NI-VGS-FSR4-05	0.01969	0.028	0.47
1/4	SS-VGE-FSR4-06	NI-VGS-FSR4-06	0.02362	0.028	0.47
1/4	SS-VGE-FSR4-07	NI-VGS-FSR4-07	0.02756	0.028	0.47
1/4	SS-VGE-FSR4-08	NI-VGS-FSR4-08	0.03150	0.028	0.47
1/4	SS-VGE-FSR4-09	NI-VGS-FSR4-09	0.03543	0.028	0.47
1/4	SS-VGE-FSR4-10	NI-VGS-FSR4-10	0.03937	0.028	0.47
1/4	SS-VGE-FSR4-12	NI-VGS-FSR4-12	0.04724	0.028	0.47
1/4	SS-VGE-FSR4-13	NI-VGS-FSR4-13	0.05118	0.028	0.47
1/4	SS-VGE-FSR4-14	NI-VGS-FSR4-14	0.05512	0.028	0.47
1/4	SS-VGE-FSR4-15	NI-VGS-FSR4-15	0.05906	0.028	0.47
1/4	SS-VGE-FSR4-17	NI-VGS-FSR4-17	0.06693	0.028	0.47
1/4	SS-VGE-FSR4-19	NI-VGS-FSR4-19	0.07480	0.028	0.47
1/4	SS-VGE-FSR4-20	NI-VGS-FSR4-20	0.07874	0.028	0.47
1/4	SS-VGE-FSR4-25	NI-VGS-FSR4-25	0.09843	0.028	0.47
1/4	SS-VGE-FSR4-30	NI-VGS-FSR4-30	0.11811	0.028	0.47

Nuts, Caps, Plugs

Female Nut



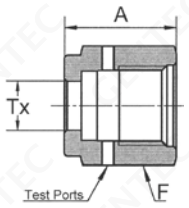

FSR Size	Ordering Number	Dimensions (in.)		
		F	A	TX
1/8	SS-VN-FSR2	7/16	0.53	0.21
1/4	SS-VN-FSR4	3/4	0.81	0.36
1/2	SS-VN-FSR8	1-1/16	0.88	0.61
3/4	SS-VN-FSR12	1-1/2	1.12	0.89
1	SS-VN-FSR16	1.81	1.34	1.20

Cap



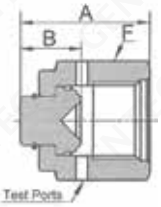

FSR 规格 FSR Size	订购型号 Ordering Number	尺寸 Dimensions		
		B	F	A
1/4	SS-VCP-FSR4	0.44	3/4	0.94
1/2	SS-VCP-FSR8	0.45	1-1/16	1.01
3/4	SS-VCP-FSR12	0.54	1-1/2	1.29
1	SS-VCP-FSR16	0.618	1.81	1.54

Male Nut



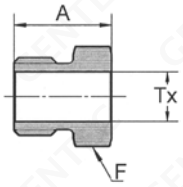

FSR Size	Ordering Number	Dimensions (in.)		
		F	A	TX
1/8	SS-VMN-FSR2	3/8	0.5	0.21
1/4	SS-VMN-FSR4	5/8	0.71	0.36
1/2	SS-VMN-FSR8	15/16	0.81	0.61
3/4	SS-VMN-FSR12	1-5/16	1.00	0.89
1	SS-VMN-FSR16	1-5/8	1.19	1.20

Plug



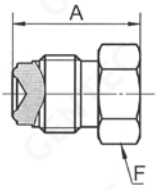

FSR Size	Ordering Number	Dimensions (in.)	
		F	A
1/8	SS-VP-FSR2	3/8	0.68
1/4	SS-VP-FSR4	5/8	0.92
1/2	SS-VP-FSR8	15/16	1.08
3/4	SS-VP-FSR12	1-5/16	1.43
1	SS-VP-FSR16	1-5/8	1.52

High-Flow Connections

Glands



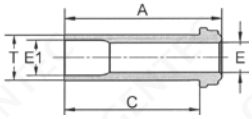

FSR Size	T Tube O.D.	Ordering Number *	Dimensions (in.) C	E	E1	A	Normal Wall Thickness	Pressure Rating (psi)
1/4″	3/8″	SL-HVDS-FSR4-T6L2	0.41	0.25	0.31	0.60	0.035	3300
1/4″	3/8″	SL-HVDS-FSR4-T6L7	1.12	0.25	0.31	1.31	0.035	3300

*: 316L VAR / 316L VIM VAR stainless steel is available, please replace SL with SLV / SLVV.

Union Elbow



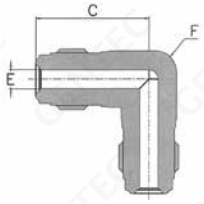

FSR Size	Ordering Number	Dimensions (in.) C	E	F	Pressure Rating (psi)
1/4″	SS-HVUE-VM4	1.07	0.25	1/2	8000

Union Tee



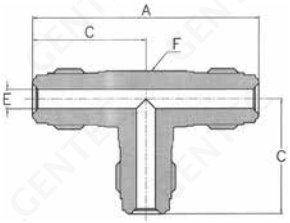

FSR Size	Ordering Number	Dimensions (in.) C	E	A	F	Pressure Rating (psi)
1/4″	SS-HVUT-VM4	1.07	0.25	2.14	1/2	8000

Female Nut



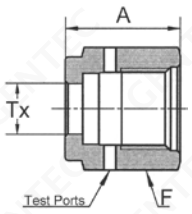

FSR Size	Ordering Number	Dimensions (in.) F	A	TX
1/4″	SS-HVN-FSR4	3/4	0.81	0.39

Male Nut



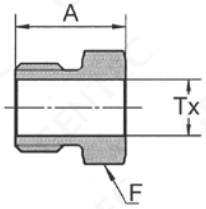

FSR Size	Ordering Number	Dimensions (in.) F	A	TX
1/4″	SS-HVMN-FSR4	5/8	0.71	0.39

Assembly Instructions

STEP 1 PROTECTION



Remove plastic protector cap protecting the gland sealing surfaces. Go to STEP 2A for Retainer Assembly, for Non-retained assembly go to STEP2B.

STEP 2A RETAINER ASSEMBLY



Place the retained gasket over the gland face, taking care not to scratch or nick the sealing surface, as this could affect performance.

STEP 2B NON-RETAINER ASSEMBLY



Place Gasket into female nut.

STEP 3 FINGERTIGHT



Assemble the components and tighten them finger-tight.

STEP 4 MARK



Mark the hex flat on both the male and female nuts.

STEP 5 TIGHTEN



Hold the backup wrench stationary and tighten the female nut 1/8 turn beyond finger-tight.

Note: Extreme over tightening will damage surface and cause potential leakage.

WELD FITTINGS



GENTEC® Weld Fittings provide high-integrity connections for ultra-high purity systems. These fittings are designed with compact configurations, making them ideal for use with orbital welding equipment. Constructed from stainless steel, GENTEC® weld fittings undergo specialized machining and surface enhancements to prevent outgassing and resist corrosion.

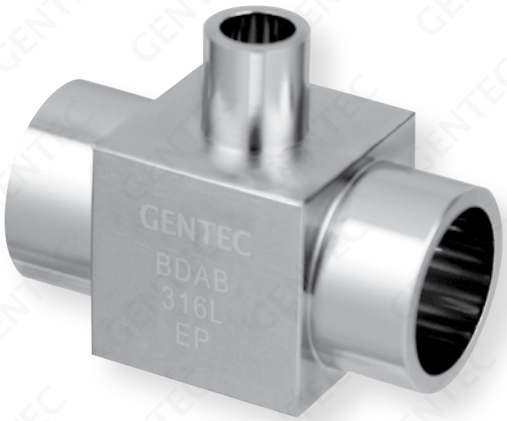

Features

- Designed to accommodate tubing systems that require miniaturization
- Allows for close component spacing

Material

▶ 316L, 316L VAR, and 316L VIM/VAR stainless steel are available, with 316L stainless steel being the standard material. When ordering alternative materials, please replace “SL” with “SLV” or “SLVV.”

Material	Designator
316L	SL
316L VAR	SLV
316 VIM / VAR	SLVV

Ordering Information

▶ To order EP fittings, use the following Designator code as a suffix to the Ordering Number.

Example: SLV-MRU-4-2P

Wetted Surface Grade	Designator	Surface Finish
BA	-	10μin (0.25μm)
EP	P	5μin (0.13μm)

Pressure & Temperature Ratings

The pressure ratings in this catalog are based on ASME B31.3 and ASME B31.1 standards for Stainless Steel 316, with a permissible stress value of 20,000 psi (1378 bar) in the temperature range of -20 to 100°F (-28 to 37°C).

For temperatures above 100°F (37°C), the operating pressure is calculated using the temperature coefficients provided in the table below.

Temperature °F (°C)	Factors (316)	Factors (316L)
-20(-28) ~ 100 (37)	1.00	1.00
200 (93)	1.00	0.83
400 (204)	0.96	0.77
600 (315)	0.85	0.67
800 (427)	0.79	0.62
1000 (537)	0.76	0.56

Example: SL-VDS-FSR4-T4L2 Short welded tube has a pressure rating of 5100 psi. The pressure rating at 400°F (204°C) is calculated by: 5100 psi x 0.77 =3927 psi

Technical Date

Size	Pressure Rating		Normal Wall Thickness
	psi	bar	
1/4″	5100	350	0.035"
3/8″	3300	220	0.035"
1/8″	8500	580	0.028"
1/2″	3300	220	0.049"
3/4″	2400	160	0.049"
1″	2400	160	0.065"
6M	5100	350	0.039"
8M	5100	350	0.039"
10M	3300	220	0.039"
12M	3300	220	0.039″

Reducing Union



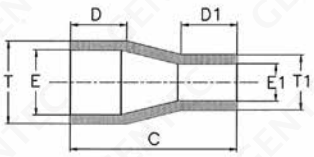

T	T1	Ordering Number *	Dimensions (in.)					Pressure Rating (psi)
			C	D	D1	E	E1	
1/4″	1/8″	SL-MRU-4-2	0.75	0.41	0.25	0.18	0.07	5100
3/8″	1/4″	SL-MRU-6-4	0.75	0.41	0.25	0.18	0.07	3300
1/2″	1/4″	SL-MRU-8-4	0.75	0.41	0.25	0.18	0.07	3700
1/2″	3/8″	SL-MRU-8-6	0.75	0.41	0.25	0.18	0.07	3300

*: 316L VAR / 316L VIM VAR stainless steel is available, please replace SL with SLV / SLVV.

90° Union Elbow



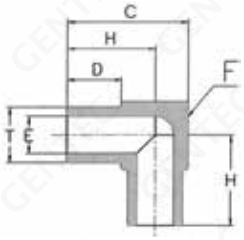

T	Ordering Number *	Dimensions (in.)					Pressure Rating (psi)
		C	D	E	F	H	
1/4″	SL-MUE-4	0.56	0.25	0.18	5/16	0.41	5100
3/8″	SL-MUE-6	0.69	0.25	0.31	7/16	0.47	3300
1/2″	SL-MUE-8	0.81	0.25	0.40	9/16	0.53	3700

*: 316L VAR / 316L VIM VAR stainless steel is available, please replace SL with SLV / SLVV.

Reducing Elbow



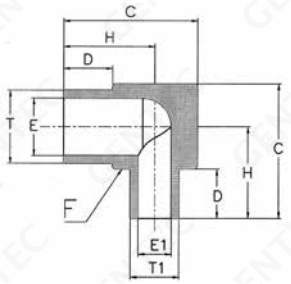

T	T1	Ordering Number *	Dimensions (in.)						Pressure Rating (psi)
			C	D	E	E1	F	H	
3/8″	1/4″	SL-MRE-6-4	0.69	0.25	0.31	0.18	7/16	0.47	3300
1/2″	1/4″	SL-MRE-8-4	0.81	0.25	0.4	0.18	9/16	0.53	3700
1/2″	3/8″	SL-MRE-8-6	0.81	0.25	0.4	0.31	9/16	0.53	3300

*: 316L VAR / 316L VIM VAR stainless steel is available, please replace SL with SLV / SLVV.

Long 90° Union Elbow



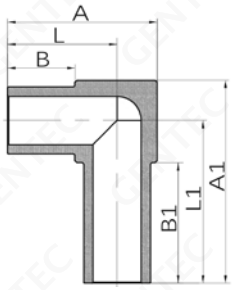

O.D.	Normal Wall Thickness	Ordering Number *	Dimensions (in.)							Pressure Rating (psi)
			A	A1	B	B1	F	L	L1	
1/4″	0.035	SL*-MUE-4P-L11.4	0.56	0.76	0.25	0.45	5/16	0.41	0.61	5100
1/4″	0.035	SL*-MUE-4P-L12.7	0.56	0.81	0.25	0.50	5/16	0.41	0.66	5100
1/4″	0.035	SL*-MUE-4P-L11.4D	0.76	0.76	0.45	0.45	5/16	0.61	0.61	5100
1/4″	0.035	SL*-MUE-4P-L12.7D	0.81	0.81	0.50	0.50	5/16	0.66	0.66	5100

*: 316L VAR / 316L VIM VAR stainless steel is available, please replace SL with SLV / SLVV.

45° Union Elbow



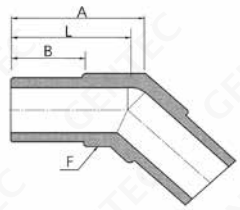

O.D.	Normal Wall Thickness	Ordering Number *	Dimensions (in.)				Pressure Rating (psi)
			A	B	F	L	
1/4	0.035	SL*-MUEV-4P	0.47	0.25	5/16	0.41	5100
3/8	0.035	SL*-MUEV-6P	0.56	0.25	7/16	0.47	3300
1/2	0.049	SL*-MUEV-8P	0.64	0.25	9/16	0.53	3700

*: 316L VAR / 316L VIM VAR stainless steel is available, please replace SL with SLV / SLVV.

Three-dimensional Tee



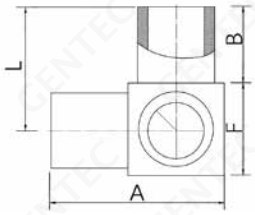

O.D.	Normal Wall Thickness	Ordering Number *	Dimensions (in.)				Pressure Rating (psi)
			A	B	F	L	
1/4	0.035	SL-UTB-4P	0.56	0.25	5/16	0.41	5100
3/8	0.035	SL-UTB-6P	0.69	0.25	7/16	0.47	3300
1/2	0.049	SL-UTB-8P	0.81	0.25	9/16	0.53	3700

*: 316L VAR / 316L VIM VAR stainless steel is available, please replace SL with SLV / SLVV.

Union Tee



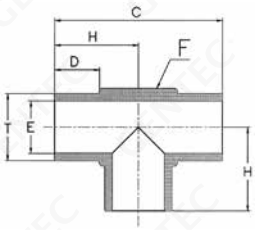

T	Ordering Number *	Dimensions (in.)					Pressure Rating (psi)
		C	D	E	F	H	
1/4″	SL-MUT-4	0.82	0.25	0.18	5/16	0.41	5100
3/8″	SL-MUT-6	0.94	0.25	0.31	7/16	0.47	3300
1/2″	SL-MUT-8	1.06	0.25	0.40	9/16	0.53	3700

*: 316L VAR / 316L VIM VAR stainless steel is available, please replace SL with SLV / SLVV.

Reducing Tee



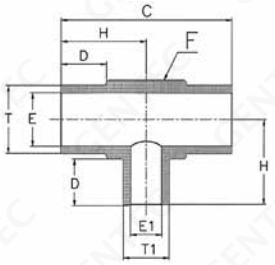

T	T1	Ordering Number *	Dimensions (in.)						Pressure Rating (psi)
			C	D	E	E1	F	H	
3/8″	1/4″	SL-MRT-6-4	0.94	0.25	0.31	0.18	7/16	0.47	3300
1/2″	1/4″	SL-MRT-8-4	1.06	0.25	0.40	0.18	9/16	0.53	3700
1/2″	3/8″	SL-MRT-8-6	1.06	0.25	0.40	0.31	9/16	0.53	3300

*: 316L VAR / 316L VIM VAR stainless steel is available, please replace SL with SLV / SLVV.

Union Cross



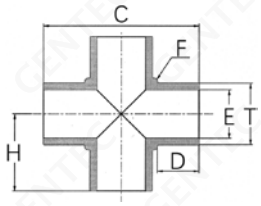

T	Ordering Number *	Dimensions (in.)					Pressure Rating (psi)
		C	D	E	F	H	
1/4″	SL-MUC-4	0.82	0.25	0.18	5/16	0.41	5100
3/8″	SL-MUC-6	0.94	0.25	0.31	7/16	0.47	3300
1/2″	SL-MUC-8	1.06	0.25	0.40	9/16	0.53	3700

*: 316L VAR / 316L VIM VAR stainless steel is available, please replace SL with SLV / SLVV.

Reducing Union



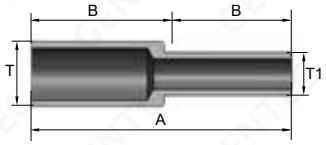

ENGLISH UNITS

T	T1	Ordering Number *	Dimensions (in.) A	B	Pressure Rating (psi)
3/8	1/4	SL-TWRU-6-4	1.5	0.75	3300
1/2	1/4	SL-TWRU-8-4	1.5	0.75	3700
1/2	3/8	SL-TWRU-8-6	1.5	0.75	3300
3/4	1/2	SL-TWRU-12-8	1.5	0.75	2400
1	1/2	SL-TWRU-16-8	1.5	0.75	2400
1	3/4	SL-TWRU-16-12	1.5	0.75	2400

METRIC UNITS

T	T1	Ordering Number *	Dimensions (mm) A	B	Pressure Rating (psi)
10	6	SL-TWRU-10M-6M	38	19	3500
10	8	SL-TWRU-10M-8M	38	19	3500
12	6	SL-TWRU-12M-6M	38	19	2900
12	8	SL-TWRU-12M-8M	38	19	2900
12	10	SL-TWRU-12M-10M	38	19	2900
18	6	SL-TWRU-18M-6M	38	19	2900
18	12	SL-TWRU-18M-12M	38	19	2900

*: 316L VAR / 316L VIM VAR stainless steel is available, please replace SL with SLV / SLVV.

90° Union Elbow



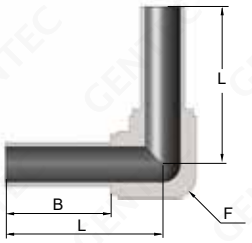

ENGLISH UNITS

Tube O.D.	Tube Thickness	Ordering Number	Dimensions (in.) B	F	L	Pressure Rating (psi)
1/4	0.035	SL-TWUE-4	0.75	7/16	1.23	5100
3/8	0.035	SL-TWUE-6	0.75	7/16	1.20	3300
1/2	0.049	SL-TWUE-8	0.75	11/16	1.34	3700
3/4	0.049	SL-TWUE-12	0.75	15/16	1.46	2400

METRIC UNITS

Tube O.D.	Tube Thickness	Ordering Number	Dimensions (mm) B	F	L	Pressure Rating (psi)
6	1	SL-TWUE-6M	19.0	7/16	31.2	6100
8	1	SL-TWUE-8M	19.0	7/16	31.2	4500
10	1	SL-TWUE-10M	19.0	11/16	34.0	3500
12	1	SL-TWUE-12M	19.0	11/16	34.0	2900
18	1.5	SL-TWUE-18M	19.0	15/16	37.6	2900

Union Tee



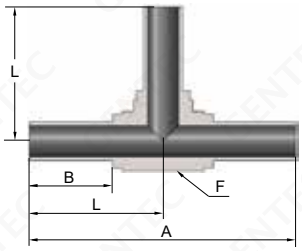

ENGLISH UNITS

Tube O.D.	Tube Thickness	Ordering Number	Dimensions (in.) A	B	F	L	Pressure Rating (psi)
1/4	0.035	SL-TWUT-4	2.46	0.75	7/16	1.23	5100
3/8	0.035	SL-TWUT-6	2.40	0.75	7/16	1.20	3300
1/2	0.049	SL-TWUT-8	2.68	0.75	11/16	1.34	3700
3/4	0.049	SL-TWUT-12	2.92	0.75	15/16	1.46	2400

METRIC UNITS

Tube O.D.	Tube Thickness	Ordering Number	Dimensions (mm) A	B	F	L	Pressure Rating (psi)
6	1	SL-TWUT-6M	62.5	19.0	7/16	31.2	6100
8	1	SL-TWUT-8M	62.5	19.0	7/16	31.2	4500
10	1	SL-TWUT-10M	68.0	19.0	11/16	34.0	3500
12	1	SL-TWUT-12M	68.0	19.0	11/16	34.0	2900
18	1	SL-TWUT-18M	75.2	19.0	15/16	37.6	2900

Reducing Tee



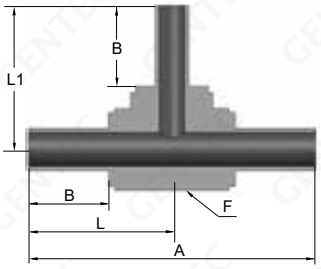

ENGLISH UNITS

Tube O.D.	Tube Thickness	Tube O.D.	Tube Thickness	Ordering Number	Dimensions (in.) A	B	F	L	L1	Pressure Rating (psi)
3/8	0.035	1/4	0.035	SL-TWRT-6-4	2.40	0.75	7/16	1.20	1.23	3300
1/2	0.049	1/4	0.035	SL-TWRT-8-4	2.68	0.75	11/16	1.34	1.34	3700
1/2	0.049	3/8	0.035	SL-TWRT-8-6	2.68	0.75	11/16	1.34	1.35	3300
3/4	0.050	1/2	0.049	SL-TWRT-12-6	2.92	0.75	15/16	1.46	1.35	2400
3/4	0.050	3/4	0.050	SL-TWRT-12-8	2.92	0.75	15/16	1.46	1.48	2400

Reducing Tee



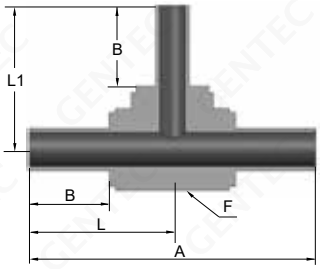

METRIC UNITS

Tube O.D.	Tube Thickness	Tube O.D.	Tube Thickness	Ordering Number	Dimensions (mm) A	B	F	L	L1	Pressure Rating (psi)
8	1	6.0	1	SL-TWRT-8M-6M	62.6	19	7/16	31.3	31.3	4500
10	1	6.0	1	SL-TWRT-10M-6M	68.0	19	11/16	34.0	34.0	3500
10	1	8.0	1	SL-TWRT-10M-8M	68.0	19	11/16	34.0	34.0	2900
12	1	6.0	1	SL-TWRT-12M-6M	68.0	19	11/16	34.0	34.0	2900
12	1	8.0	1	SL-TWRT-12M-8M	68.0	19	11/16	34.0	34.0	2900

Union Cross



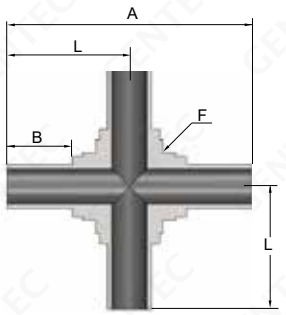

ENGLISH UNITS

Tube O.D.	Tube Thickness	Ordering Number	Dimensions (in.) A	B	F	L	Pressure Rating (psi)
1/4	0.035	SL-TWUC-4	2.46	0.75	7/16	1.23	5100
3/8	0.035	SL-TWUC-6	2.40	0.75	7/16	1.2	3300
1/2	0.049	SL-TWUC-8	2.55	0.75	11/16	1.27	3700

METRIC UNITS

Tube O.D.	Tube Thickness	Ordering Number	Dimensions (mm) A	B	F	L	Pressure Rating (psi)
6	1	SL-TWUC-6M	62.6	19	7/16	31.3	6100
8	1	SL-TWUC-8M	62.6	19	7/16	31.3	4500
10	1	SL-TWUC-10M	64.8	19	5/8	32.4	3500
12	1	SL-TWUC-12M	64.8	19	5/8	32.4	2900

MATERIAL COMPATIBILITY

A GENTEC® Product Material Compatibility

	Material											
Gas	Aluminum	Brass	Copper	Mone	Stainless Steel	Carbon Steel	Neoprene	PCTFE (Kel-F)	Viton	Polyethyler	PVC	PTFE (Teflon)
Ammonia	•	◦	◦	•	•	◦	•	•	◦	◦	•	•
Argon	•	•	•	•	•	•	•	•	•	•	•	•
CO_2	•	•	•	•	•	•	•	•	•	•	•	•
Chlorine	◦	◦	◦	•	•	•	◦	•	•	•	◦	•
Diborane	•	•	•	•	•	•	◦	•	•	◦	◦	•
Helium	•	•	•	•	•	•	•	•	•	•	•	•
Hydrogen	•	•	•	•	•	•	•	•	•	•	•	•
HCl	◦	◦	◦	•	•	◦	•	•	•	•	•	•
H_2S	•	◦	◦	•	•	◦	◦	•	•	•	•	•
Methane	•	•	•	•	•	•	•	•	•	•	•	•
Nitrogen	•	•	•	•	•	•	•	•	•	•	•	•
N_2O	•	•	•	•	•	•	•	•	•	•	•	•
Oxygen	•	•	•	•	•	•	•	•	•	◦	◦	•
Phosphine	•	◦	◦	•	•	•	◦	•	•	•	•	•
Silane	•	•	•	•	•	•	•	•	•	•	•	•
SO_2	•	•	•	•	•	•	◦	•	◦	•	•	•
F_6S	•	•	•	•	•	•	•	•	•	•	•	•
Arsine	◦	•	◦	•	•	•	•	•	•	•	•	•
Boron Trichloride	◦	◦	•	•	•	•	◦	•	•	◦	•	•
Boron Trifluoride	•	◦	•	•	•	•	◦	•	◦	◦	•	•
Dichloriosilane	◦	◦	◦	•	•	•	◦	•	◦	◦	◦	•
Silicon Tetrachloride	◦	◦	◦	•	•	•	◦	•	◦	◦	◦	•
Acetylene	•	•	◦	•	•	•	•	•	◦	•	◦	•
Air	•	•	•	•	•	•	•	•	•	•	•	•
Butane	•	•	•	•	•	•	•	•	•	◦	•	•
Carbon Monoxide	•	•	•	•	•	•	◦	•	•	•	•	•
Cyclopropane	•	•	•	•	•	•	•	•	•	•	•	•
Ethane	•	•	•	•	•	•	•	•	•	•	•	•
Ethylene	•	•	•	•	•	•	•	•	•	•	◦	•
Ethylene Oxide	•	•	•	•	•	•	◦	•	◦	◦	◦	•
Isobutane	•	•	•	•	•	•	•	•	•	◦	•	•
Krypton	•	•	•	•	•	•	•	•	•	•	•	•
Methyl Chloride	◦	◦	•	•	•	•	•	•	•	•	◦	•
Neon	•	•	•	•	•	•	•	•	•	•	•	•
NO	•	◦	◦	◦	•	•	◦	•	•	•	•	•
Propane	•	•	•	•	•	•	•	•	•	•	•	•
Xenon	•	•	•	•	•	•	•	•	•	•	•	•

• Recommended ◦ Not Recommended • Recommended only for dry-grades of gas

ALLOCATION TABLE

Cylinder Connections Allocation Table

Gas	BSP	DIN	CGA	UHP CGA	JIS
Acetylene	BS341 No. 2	==	510	==	==
Air	BS341 No. 3	==	346	==	==
Ammonia	BS341 No. 10	DIN6	705	720	22-R
Argon	BS341 No. 3	DIN6	580	718	22-4 or 23-R
Arsine	==	==	350	632	22-L
Boron Trichloride	==	DIN8	660	634	==
Boron Trifluoride	==	DIN8	330	642	22-L
Butane	BS341 No. 4	==	510	==	==
Carbon Dioxide	BS341 No. 8	DIN6	320	716	==
Carbon Monoxide	BS341 No. 4	DIN5	350	724	22-L
Cyclopropane	BS341 No. 4	==	510	==	==
Diborane	==	==	350	632	22-L
Dichloriosilane	==	DIN5	678	636	==
Diethylzinc	==	==	510	726	==
Ethane	==	==	350	==	==
Ethyl Chloride	==	==	510	==	==
Ethylene	==	==	350	==	==
Ethylene Oxide	==	==	510	==	==
Germane	==	==	350 or 660	632	==
R11 (R116) / Halocarbon 11 (116)	==	==	660	716	==
R12 (R13, R23, R115) / Halocarbon 12 (13, 23, 115)	==	DIN6	660	716	==
R14 (Halocarbon 14)	==	DIN6	320 or 580	716	==
Helium	BS341 No. 3	DIN6	580	718	22-R or 23-L
Hydrogen	BS341 No. 2	DIN1	350	724	22-L
Hydrogen Chloride	==	DIN8	330	634	26-R
Hydrogen Fluoride	==	==	660 or 670	638	26-R
Hydrogen Sulfide	==	DIN5	330	722	==
Iso-Butane	==	==	510	==	==
Krypton	==	DIN6	580	718	22-R or 23-R
Methane	BS341 No. 2	==	350	==	==
Methyl Chloride	==	==	660	==	==
Natural Gas	==	==	350	==	==
Neon	==	DIN6	580	718	22-R or 23-R
Nitric Oxide	==	==	660	==	==
Nitrogen	BS341 No. 3	DIN10	580	718	22-R or 23-R
Nitrogen Trifleoride	==	DIN8	330 or 670	640	==
Nitrous Oxide	BS341 No. 13	DIN9	326	712	==
Oxygen	BS341 No. 3	DIN1	540	714	22-R or 23-R
Phosphine	==	==	350	632	==
Propane	BS341 No. 4	==	510	==	==
Silane	==	==	350	632	==
Silicon Tetrachloride	==	==	330	636	==
Silicon Tetrafluoride	==	==	330	642	22-L
Sulfur Hexafluoride	==	DIN6	590	716	26-R
Tungsten Hexafluoride	==	DIN8	670	638	
Xenon	==	DIN6	580	718	22-R

*Chart is for reference only

Conversion Factors for Units of Pressure

TO COVER FROM TO	psi	mbar	bar	atm	Pa	KPa	MPa	cm H_2O @20 °C	in H_2O @20 °C	ft H_2O @20 °C	mm Hg @20 °C	in Hg @20 °C	kg / cm^2	ft.sea water
psi	1	68.948	0.069	0.068	6894.76	6.895	6.89476 × 10^{-3}	70.433	27.730	2.311	51.715	2.036	0.070	2.246
mbar	0.015	1	0.001	9.86923 × 10^{-4}	100	0.1	0.0001	1.022	0.040	0.034	0.750	0.030	0.001	0.033
bar	14.504	1000	1	0.987	100000	100	0.1	1021.5	402.18	33.52	750.06	29.53	1.110	32.571
atm	14.697	1013.25	1.013	1	101325	101.325	0.101	1035.08	407.511	35.959	760.0	29.921	1.033	33.032
Pa	1.45038 × 10^{-4}	0.01	0.00001	9.89623 × 10^{-6}	1	0.001	0.000001	0.010	0.004	3.352 × 10^{-4}	7.5006 × 10^{-4}	2.953 × 10^{-4}	1.019716 × 10^{-5}	3.2571 × 10^{-4}
kPa	0.145	10	0.01	0.010	1000	1	0.001	10.215	4.021	0.335	7.501	0.295	0.102	0.326
MPa	145.024	10000	10	9.869	1000000	1000	1	10215	4021.18	335.2	7500.6	295.300	10.197	325.71
cm H_2O @20 °C	0.014	0.979	9.7891 × 10^{-4}	9.66105 × 10^{-4}	97.891	0.098	9.7891 × 10^{-5}	1	0.394	0.035	0.734	0.029	9.9821 × 10^{-4}	0.032
in H_2O @20 °C	0.036	2.468	0.002	2.45932 × 10^{-3}	248.64	0.249	2.4864 × 10^{-4}	2.540	1	0.083	1.865	0.073	0.003	0.081
ft H_2O @20 °C	0.433	29.837	0.030	0.294	2983.68	2.984	2.98368 × 10^{-3}	30.480	12	1	22.380	0.881	0.030	0.972
mm Hg @0 °C	193368	1.333	0.001	0.001	133.322	0.133	1.33322 × 10^{-4}	1.362	0.536	0.045	1	0.039	0.001	0.043
in Hg @0 °C	0.491	33.864	0.034	0.033	3386.39	3.386	3.3869 × 10^{-3}	34.593	13.619	1.135	25.4	1	0.035	1.103
kg / cm^2	14.223	980.665	0.981	0.968	98060.5	98.067	0.098	1001.8	394.41	32.868	735.559	28.959	1	31.941
ft.sea water	0.445	30.702	0.031	0.030	3070.2	3.070	3.0702 × 10^{-3}	31.364	12.348	1.029	23.029	0.907	0.031	1

Conversion Factors for Units of Flow

TO COVERT FROM TO	l / SEC	L / min (LPM)	m^3 / h	m^3 / min	ft^3 / h (SCFH)	ft^3 / min
l / SEC	1	60	3.6	0.06	127.14	2.119
l / MIN (LPM)	0.017	1	0.06	0.001	2.119	0.035
m^3 / h	0.278	16.667	1	0.017	35.317	0.588
m^3 / min	16.667	1000	60	1	2118	35.317
ft^3 / h (SCFH)	0.008	0.472	0.0283	0.000	1	0.017
ft^3 / min	0.472	28.315	1.699	0.028	60	1



Gas Control Systems Solutions Overview

- Manifold Systems
- Control Panels
- HP/UHP Regulators
- Pressure Gauges
- Valves & Fittings



Specialty Manifold Systems

- Chrome-plated Brass Specialty Gas Control Panels
- Stainless Steel Specialty Gas Control Panels
- Specialty Gas Manifolds
- Terminal Gas Control Panel
- Other Control Systems
- Accessories



Specialty Gas Regulators & Gauges

- General Purpose Forged Brass Regulators
- High Purity Brass Barstock Regulators
- High Purity Stainless Steel Barstock Regulators
- Accessories



Valves

- Needle Valves
- Ball Valves
- Diaphragm Valves
- Cylinder Valves
- Metering Valves
- Gauge Valves
- Check Valves



Tube Fittings

- Male Connectors
- Male Elbows
- Male Adapters
- Female Connectors
- Female Elbows
- Unions
- Reducing unions



IGS

- IGS C-Seal Base Block & Sealing Gasket
- IGS W-Seal Base Block & Sealing Gasket
- IGS R Series Regulator
- IGS DV Series LOTO Diaphragm Valves
- IGS DV Series Pneumatic Diaphragm Valves
- IGS CV Series Check Valve
- IGS MV Series Metering Diaphragm Valves

Please contact us for any questions about catalogs.

- Requesting Catalogs
- Register an account to view / download pdf catalogs. (Online Register)

To view our full line of Specialty Gas Products please visit us online at www.gentec.com

GENSTAR TECHNOLOGIES COMPANY INC.
4525 Edison Ave, Chino, CA 91710
Tel: 909.606.2726
Fax: 909.606.6485
www.gentec.com

COPYRIGHT © 2026 Genstar Techlogies Co., Inc. April 2026.

CATA#: SS04V2606-6